E-flite®
ADVANCING ELECTRIC FLIGHT

Super Timber 1.7m

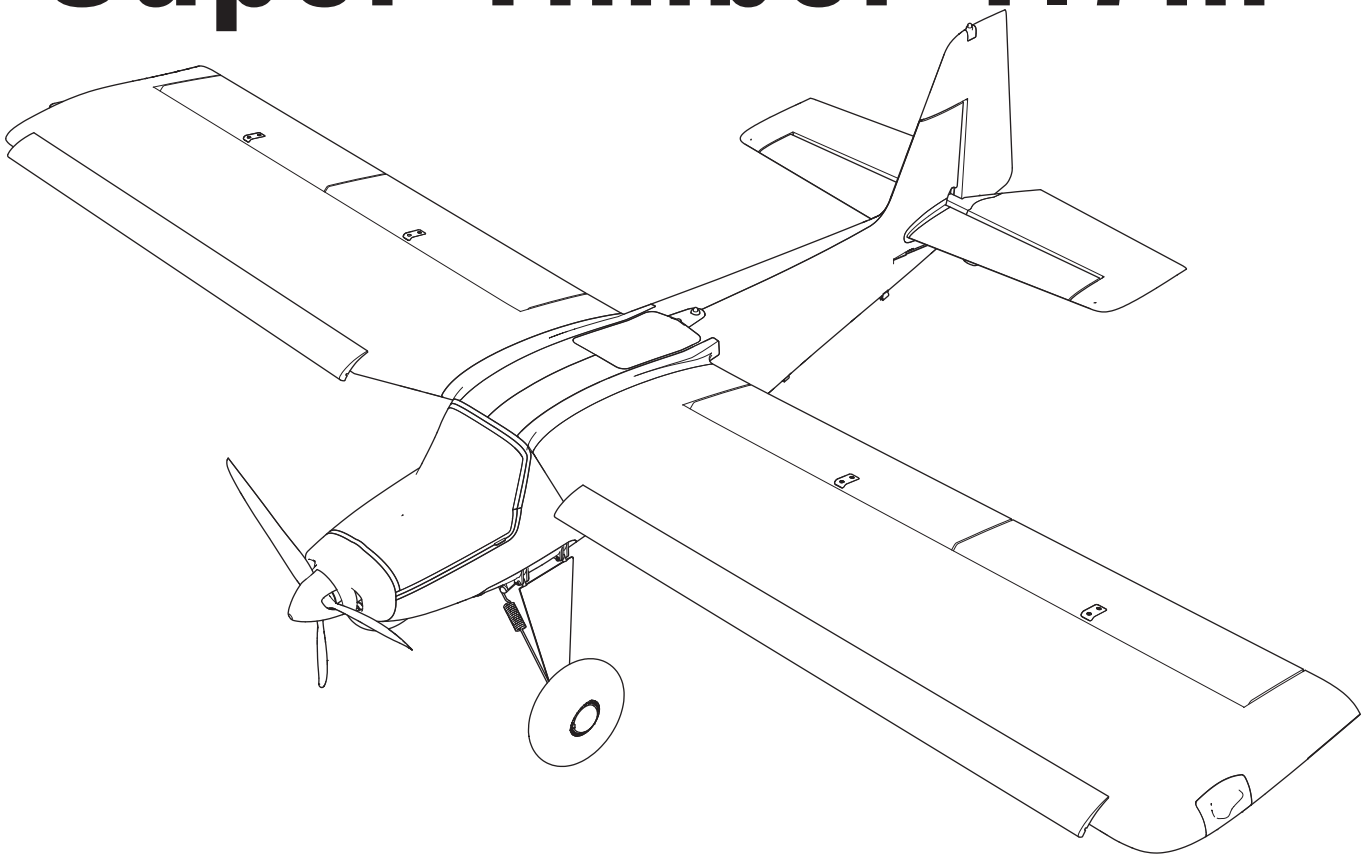

Scan the QR code and select the Manuals and Support quick links from the product page for the most up-to-date manual information.
Scannen Sie den QR-Code und wählen Sie auf der Produktseite die Quicklinks Handbücher und Unterstützung, um die aktuellsten Informationen zu Handbücher.
Scannez le code QR et sélectionnez les liens rapides Manuals and Support sur la page du produit pour obtenir les informations les plus récentes sur le manuel.
Scannerizzare il codice QR e selezionare i Link veloci Manuali e Supporto dalla pagina del prodotto per le informazioni manuali più aggiornate.

BNF® BASIC — EFL02550

PNP® PLUG-N-PLAY® — EFL02575

Instruction Manual
Bedienungsanleitung
Manuel d'utilisation
Manuale di Istruzioni

261689.3
Updated 7/26

HORIZON® HOBBY

NOTICE

All instructions, warranties and other collateral documents are subject to change at the sole discretion of Horizon Hobby, LLC. For up-to-date product literature, visit horizonhobby.com or towerhobbies.com and click on the support or resources tab for this product.

MEANING OF SPECIAL LANGUAGE

The following terms are used throughout the product literature to indicate various levels of potential harm when operating this product:
WARNING: Procedures, which if not properly followed, create the probability of property damage, collateral damage, and serious injury OR create a high probability of superficial injury.
CAUTION: Procedures, which if not properly followed, create the probability of physical property damage AND a possibility of serious injury.
NOTICE: Procedures, which if not properly followed, create a possibility of physical property damage AND little or no possibility of injury.

WARNING: Read the ENTIRE instruction manual to become familiar with the features of the product before operating. Failure to operate the product correctly can result in damage to the product, personal property and cause serious injury.
This is a sophisticated hobby product. It must be operated with caution and common sense and requires some basic mechanical ability. Failure to operate this Product in a safe and responsible manner could result in injury or damage to the product or other property. This product is not intended for use by children without direct adult supervision. Do not use with incompatible components or alter this product in any way outside of the instructions provided by Horizon Hobby, LLC. This manual contains instructions for safety, operation and maintenance. It is essential to read and follow all the instructions and warnings in the manual, prior to assembly, setup or use, in order to operate correctly and avoid damage or serious injury.

AGE RECOMMENDATION: Not for children under 14 years. This is not a toy.

Safety Precautions and Warnings

As the user of this product, you are solely responsible for operating in a manner that does not endanger yourself and others or result in damage to the product or the property of others.

- Always keep a safe distance in all directions around your model to avoid collisions or injury. This model is controlled by a radio signal subject to interference from many sources outside your control. Interference can cause momentary loss of control.
- Always operate your model in open spaces away from full-size vehicles, traffic and people.
- Always carefully follow the directions and warnings for this and any optional support equipment (chargers, rechargeable battery packs, etc.).
- Always keep all chemicals, small parts and anything electrical out of the reach of children.
- Always avoid water exposure to all equipment not specifically designed and protected for this purpose. Moisture causes damage to electronics.
- Never place any portion of the model in your mouth as it could cause serious injury or even death.
- Never operate your model with low transmitter batteries.
- Always keep aircraft in sight and under control.
- Always use fully charged batteries.
- Always keep transmitter powered on while aircraft is powered.
- Always remove batteries before disassembly.
- Always keep moving parts clean.
- Always keep parts dry.
- Always let parts cool after use before touching.
- Always remove batteries after use.
- Always ensure failsafe is properly set before flying.
- Never operate aircraft with damaged wiring.
- Never touch moving parts.

WARNING AGAINST COUNTERFEIT PRODUCTS: If you ever need to replace your Spektrum receiver found in a Horizon Hobby product, always purchase from Horizon Hobby, LLC or a Horizon Hobby authorized dealer to ensure authentic high-quality Spektrum product. Horizon Hobby, LLC disclaims all support and warranty with regards, but not limited to, compatibility and performance of counterfeit products or products claiming compatibility with DSM or Spektrum technology.

Registration

Register your product today to join our mailing list and keep up to date with product updates, offers and E-flite® news.

Table of Contents

Safety Precautions and Warnings 2
SAFE® Select Technology (*BNF Basic*) 4
Smart Transmitter Setup (*BNF Basic*) 4
Manual Transmitter Setup (*BNF Basic*) 5
STF and Manual Transmitter Setup Switch Layout 6
Model Assembly 7
Battery Installation and ESC Arming 10
General Binding Tips and Failsafe *BNF* 11
Transmitter and Receiver Binding / Enabling and Disabling SAFE Select *BNF* 11
Control Surface Centering 12
Center of Gravity (CG) 12
SAFE® Select Switch Designation (*BNF Basic*) 13
Smart™ Technology Telemetry 14
Dual Rates and Control Throws 14
Control Surface Direction 15
AS3X+ Control Response Test (*BNF Basic*) 16
In Flight Trimming 17
Flying Tips and Repairs 17
Post Flight Checklist 17
Receiver Installation *(PNP)* 18
Thrust Reversing *(Optional)* 18
Tire Service 19
Motor Service 19
Float Installation *(Optional, floats not included)* 20
Flying Off Water 21
Troubleshooting Guide AS3X+ (*BNF Basic*) 22
Troubleshooting Guide 22
Replacement Parts 23
Recommended Items 23
Optional Items 23
Important Federal Aviation Administration (FAA) Information 24
AMA National Model Aircraft Safety Code 24
Limited Warranty 25
Contact Information 25
FCC Information 26
IC Information 26
Compliance Information for the European Union 26

Specifications	
Wingspan	68" (1728mm)
Length	45" (1143mm)
Weight	Without Battery: 93oz (2641g) With Recommended 6S 3200mAh Flight Battery: 111oz (3149g)

Included Equipment	
Receiver *(BNF only)*	Spektrum™ AR637TA 6-Channel AS3X+/SAFE Telemetry Receiver (SPM-1032)
ESC	Avian 85-Amp Smart Lite Brushless ESC; 3S-6S IC5 (SPMXAE85A)
Motor	Brushless Outrunner Motor: 5055-500Kv 14-pole (SPM-1003)
Propeller	13 x 8, 3-Blade; Super Timber 1.7m (EFL-1321)
Servos	(6) A347 9g Digital Metal Gear (SPMSA347) (Aileron, Elevator, Rudder, Flap)

Recommended Equipment	
Transmitter	NX8+ 20-Channel DSMX Transmitter Only (SPMR8210)
Flight Battery	3200mAh 6S 22.2V Smart G2 LiPo 30C; IC5 (SPMX326S30)
Charger	Smart S1400 G2 AC Charger, 1x400W (SPMXC2040)

Optional Batteries	
SPMX46S50	4000mAh 6S 22.2V Smart G2 LiPo 50C; IC5
SPMX56S50	5000mAh 6S 22.2V Smart G2 LiPo 50C; IC5
SPMX50004S30	5000mAh 4S 14.8V Smart LiPo 30C; IC5

Included Hardware		
2	M2 x 12mm Socket Head Machine Screw	Landing Gear Strut Pivot
2	M2 Nuts	Landing Gear Strut Pivot
2	M3 x 12mm Self Tapping Screw	Landing Gear Spring
2	M3 Washer	Landing Gear Spring
3	M3 x 8mm Socket Head Machine Screw	Propeller to Motor Adapter
1	M3 x 10mm Button Head Machine Screw	Spinner to Motor Adapter
1	M2 x 8mm Socket Head Machine Screw	Water Rudder Pushrod Clip
1	M2 Nut	Water Rudder Pushrod Clip
4	M2.5 x 10mm Self Tapping Screw	Front Float Mount on Fuselage
1	M3 x 10mm Self tapping screw	Rear Float Mount on Fuselage

Required Tools

- 1.5mm Hex Driver
- 2mm Hex Driver
- 2.5mm Hex Driver
- 15mm or Adjustable Wrench

SAFE® Select Technology (*BNF Basic*)

The BNF Basic version of this airplane includes SAFE Select technology which can offer an extra level of protection in flight. Use the following instructions to make the SAFE Select system active and assign it to a switch. When enabled, SAFE Select prevents the airplane from banking or pitching past predetermined limits, and automatic self-leveling keeps the airplane flying in a straight and level attitude when the aileron, elevator and rudder sticks are at neutral.
SAFE Select is enabled or disabled during the bind process. When the airplane is bound with SAFE Select enabled, a switch can be assigned to toggle between SAFE Select mode and AS3X+ mode. AS3X+ technology remains active with no bank angle limits or self leveling any time SAFE Select is disabled or OFF.

SAFE Select can be configured three ways;
- SAFE Select Off: Always in AS3X+ mode
- SAFE Select On with no switch assigned: Always in SAFE Select mode
- SAFE Select On with a switch assigned: Switch toggles between SAFE Select mode and AS3X+ mode

Smart Transmitter File (STF) Loading Option (*BNF Basic*)

The receiver installed in the aircraft contains a transmitter setup file developed specifically for this aircraft. This Smart Transmitter File (STF) allows you to quickly import the transmitter settings directly from the receiver during the binding process.

To load the Smart Transmitter File:

1. Turn on the transmitter.
2. Create a new blank model file on the transmitter.
3. Power on the receiver.
4. Press the bind button on the receiver.
5. Put the transmitter into bind mode: the model will bind normally.
6. Once the bind is complete, the download screen appears:
7. Select **LOAD** to continue.

Smart Transmitter File The receiver contains a pre-loaded Smart Transmitter file. Rx Version: EFL02550 (firmware version) Do you want to the load the file from the receiver	
SKIP	**LOAD**

The following screen is a warning that downloading overwrites all settings of the currently selected model. If this is a new blank model, the file populates the transmitter parameters into the active model and renames it Super Timber 1.7m.

NOTICE: Confirming will override any previously saved transmitter setups for the currently selected model.

NOTICE This WILL overwrite ALL current model settings. If stock BNF model hardware has changed, the receiver's file may not work properly- Do not use without checking everything. Do you want to the load the file from the receiver	
BACK	**CONFIRM**

8. Press **CONFIRM** to continue.

The file is installed on the transmitter and the telemetry information loads automatically when the download is complete. The radio returns to the home screen, and the new model name is displayed

The transmitter setup is now complete, and the aircraft is ready to fly.

Important Notes

Flight Modes Active with Flap System
For models equipped with flaps, the STF has Flight Modes enabled. These Flight Modes are separate from AS3X+ and SAFE Select and allow you to trim the aileron, elevator, and rudder channels separately for each flap position (0, 1, 2) as controlled by switch D. This is beneficial because it allows you to trim the aircraft for level flight when the flaps are retracted (normal mode), deployed partially (take off flaps), or fully (landing flaps). Trim the aileron, elevator, and rudder channels separately for each flap position in flight. Once you trim each Flight Mode/flap position the way you prefer, you shouldn't need to trim the aircraft much or at all again in the future.

Flight Timer
The STF does not populate a flight timer in the transmitter. The voltage monitor provides transmitter alerts when battery voltage drops to just above the LVC, indicating it is time to land. The transmitter alert is set so there is time to land before the ESC begins to surge (pulse) when LVC is reached. This method takes flying style and throttle use into account and is more precise than a timer alone. If you are not using the STF, set a timer for 3.5 minutes when using the recommended battery. Monitor the battery usage and adjust the timer after the initial flights to best suit your flying style.

Supported Transmitters, and firmware requirements, include the following:
- All NX Radios (with firmware version 4.0.11+)
- iX14 (with app version 2.0.9+)
- iX20 (with app version 2.0.9+)
- iX12 and DX radios do not currently support Smart Transmitter File transfers.

Manual Transmitter Setup (*BNF Basic*)

Dual Rates

Take first flights in low rate. For landings, use high rate elevator.

NOTICE: To ensure AS3X® technology functions properly, do not lower rate values below 50%. If lower rates are desired, manually adjust the position of the pushrods on the servo arm.

NOTICE: If oscillation occurs at high speed, refer to the Troubleshooting Guide for more information.

Exponential

After the first few flights, you can adjust the exponential values in your transmitter per your personal preference.

Telemetry Setup

See the Telemetry Setup table after binding. In order for the ESC and battery information to auto-populate in your transmitter's telemetry menu, you must begin telemetry setup with the aircraft bound and connected.

DX Series Transmitter Setup
1. Power ON your transmitter, click on scroll wheel, roll to **System Setup** and click the scroll wheel. Choose yes.
2. Go to **Model Select** and choose ***<Add New Model>*** at the bottom of the list. The system asks if you want to create a new model, select ***Create***
3. Set **Model Type**: Select ***Airplane Model Type*** by choosing the airplane. The system asks you to confirm model type, data will be reset. Select ***YES***
4. Set **Model Name**: Input a name for your model file
5. Go to **Aircraft Type** and scroll to the wing selection, choose ***1 AIL 1FLAP***
6. Select **<Main Screen>,** Click the scroll wheel to enter the **Function List**
7. Scroll down and select **Flap System**
8. Set **D/R (Dual Rate) and Expo**; ***Aileron*** Set **Switch**: ***Switch F*** Set **High Rates:** ***100%,*** **Expo** ***10%*** - **Low Rates:** ***70%,*** **Expo** ***5%***
9. Set **D/R (Dual Rate) and Expo**; ***Elevator*** Set **Switch**: ***SWITCH C*** Set **High Rates**: ***100%,*** **Expo** ***10%*** - **Low Rates** ***70%,*** **Expo** ***5%***
10. Set **Throttle Cut**; **Switch**: ***Switch H,*** **Position:** ***-100%***
11. Set the values in the flap menu Set ***SWITCH D*** Set **POS 0:** **-100% FLAP** **0% Elevator** Set **POS 1:** **0% FLAP 5% Elevator** Set **POS 2:** **100% FLAP** **9% Elevator** Set **SPEED** **2.0**

NX Series Transmitter Setup
1. Power ON your transmitter, click on scroll wheel, roll to **System Setup** and click the scroll wheel. Choose yes.
2. Go to **Model Select** and choose ***<Add New Model>*** near the bottom of the list. Select ***Airplane Model Type*** by choosing the airplane, select ***Create***
3. Set **Model Name**: Input a name for your model file
4. Go to **Aircraft Type** and scroll to the wing selection, choose ***1 AIL 1FLAP***
5. Select **<Main Screen>,** Click the scroll wheel to enter the **Function List**
6. Scroll down and select **Flap System**
7. Set **D/R (Dual Rate) and Expo**; ***Aileron*** Set **Switch**: ***Switch F*** Set **High Rates:** ***100%,*** **Expo** ***10%*** - **Low Rates:** ***70%,*** **Expo** ***5%***
8. Set **D/R (Dual Rate) and Expo**; ***Elevator*** Set **Switch**: ***SWITCH C*** Set **High Rates**: ***100%,*** **Expo** ***10%*** - **Low Rates** ***70%,*** **Expo** ***5%***
9. Set **Throttle Cut**; **Switch**: ***Switch H,*** **Position:** ***-100%***
10. Set the values in the flap menu Set ***SWITCH D*** Set **POS 0:** **-100% FLAP** **0% Elevator** Set **POS 1:** **0% FLAP** **5% Elevator** Set **POS 2:** **100% FLAP** **9% Elevator** Set **SPEED** **2.0**

iX Series Transmitter Setup
1. Power ON your transmitter and begin once the Spektrtum Airware app is open. Select the orange pen icon in the upper left corner of the screen, the system asks for permission to **Turn Off RF**, select ***PROCEED***
2. Select the three dots in the upper right corner of the screen, select ***Add a New Model***
3. Select **Model Option**, choose ***DEFAULT***, select ***Airplane.*** The system asks if you want to create a new acro model, select ***Create***
4. Select the last model on the list, named **Acro**. Tap on the word Acro and rename the file to a name of your choice
5. Press and hold the back arrow icon in the upper left corner of the screen to return to the main screen
6. Go to **Model Setup** menu. Select **Aircraft Type** The system asks for permission to **Turn Off RF**, select ***PROCEED***. Touch the screen to select wing. Select ***1 Ail 1 Flap***.
7. Press and hold the back arrow icon in the upper left corner of the screen to return to the main screen.
8. Go to the **Model Adjust** menu.
9. Set **Dual Rates and Expo**; Select ***Aileron*** Set **Switch**: ***Switch F*** Set **High Rates:** ***100%,*** **Expo** ***10%*** - **Low Rates:** ***70%,*** **Expo** ***5%***
10. Set **Dual Rates and Expo**; Select ***Elevator*** Set **Switch**: ***SWITCH C*** Set **High Rates**: ***100%,*** **Expo** ***10%*** - **Low Rates** ***70%,*** **Expo** ***5%***
11. Set the values in the flap menu Set ***SWITCH D*** Set **POS 0:** **-100% FLAP** **0% Elevator** Set **POS 1:** **0% FLAP** **5% Elevator** Set **POS 2:** **100% FLAP** **9% Elevator** Set **SPEED** **2.0**
12. Set **Throttle Cut**; **Switch**: ***Switch H,*** **Position:** ***-100%***

STF and Manual Transmitter Setup Switch Layout

The following illustration shows the switch layout and functions on a typical Spektrum transmitter when programmed per the manual transmitter setup tables or utilizing the Smart Transmitter File loaded from the aircraft receiver.

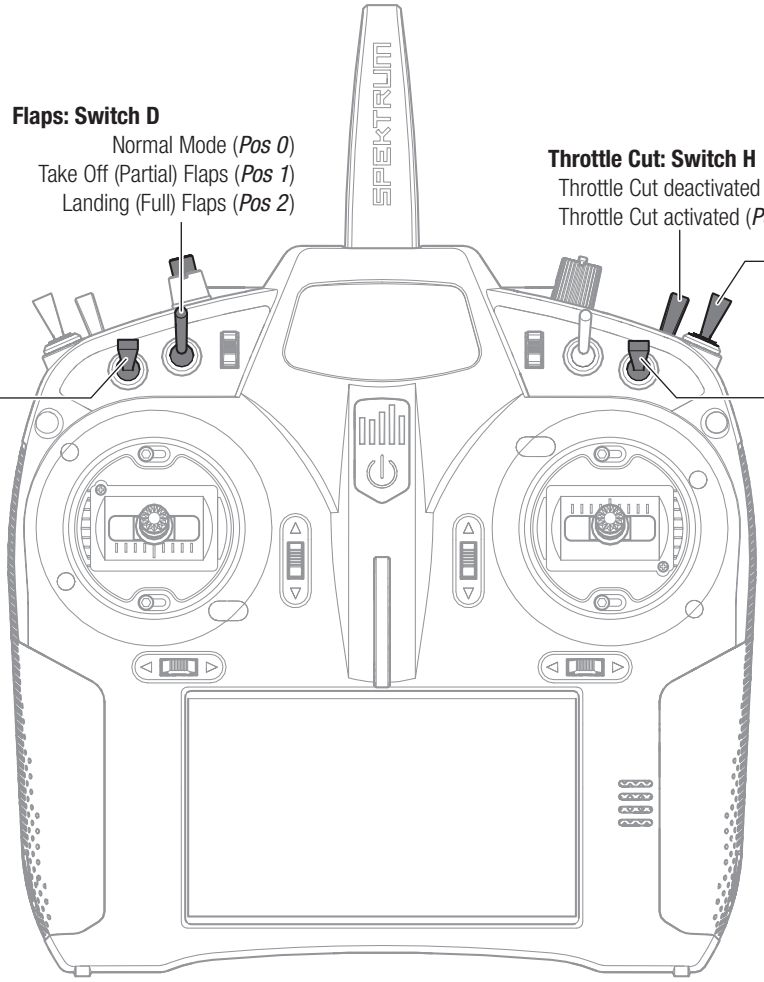

Flaps: Switch D
Normal Mode (*Pos 0*)
Take Off (Partial) Flaps (*Pos 1*)
Landing (Full) Flaps (*Pos 2*)

Throttle Cut: Switch H
Throttle Cut deactivated (*Pos 0*)
Throttle Cut activated (*Pos 1*)

Rudder Dual Rate: Switch G
Rudder High Rate (*Pos 0*)
Rudder Low Rate (*Pos 1*)
Rudder Low Rate (*Pos 2*)

Elevator Rate: Switch C
Elevator High Rate (*Pos 0*)
Elevator Low Rate (*Pos 1*)
Elevator Low Rate (*Pos 2*)

Aileron Rate: Switch F
Aileron High Rate (*Pos 0*)
Aileron Low Rate (*Pos 1*)
Aileron Low Rate (*Pos 2*)

Model Assembly

Landing Gear Installation

1. Work with the fuselage upside down. Use the package foam as airplane cradle to hold fuselage. Remove the front hatch to prevent damage to the hatch.
2. Insert the landing gear struts into the landing gear support bracket on the bottom of the fuselage.

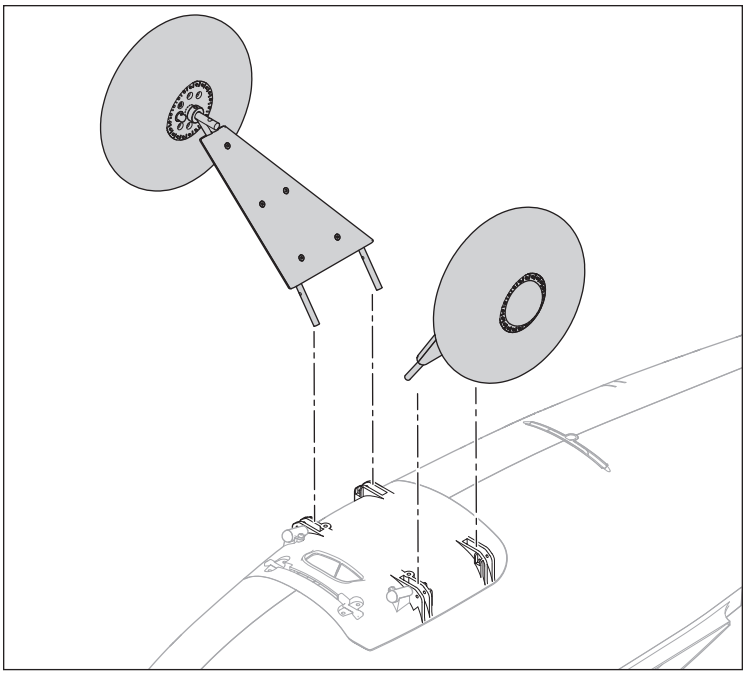

3. Secure each side of the landing gear in the bracket with two M2 x 12mm machine screws and an M2 locknut, and tighten with a 1.5mm hex driver. Use a pair of small needle nose pliers to hold the nut in place.

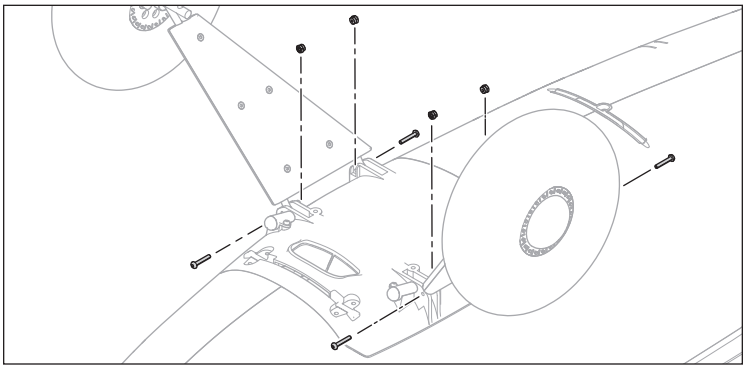

4. Connect the landing gear springs to the inside of the axles, inserting the open end of the spring hook through the axle. Attach the spring retainer to ends of springs.
5. Secure the spring retainer to the fuselage with two M3 x 12mm self tapping screws and M3 washers using a 2mm hex wrench.

   IMPORTANT: Use the included pump with air hose extension and needle to set the tires to 135mm diameter for operation. Wet the needle before inserting into the rubber air valve. Remove the rubber plug from the air valve. Insert the needle without the pump to bleed air if the tires are too large. Go to horizonhobby.com for EFL-1350 Inflatable Tundra Tire and Beadlock Wheel Set w/Pump for most recent instruction manual and replacement part listing.

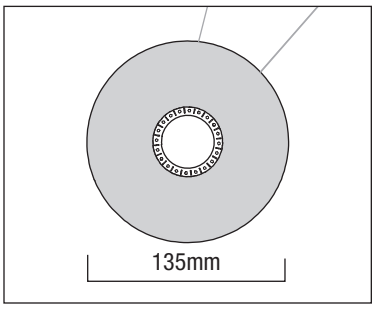

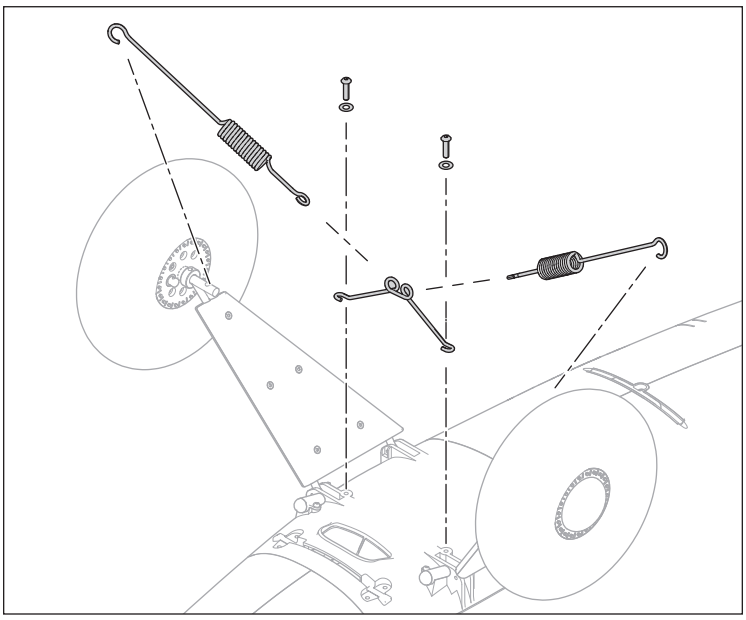

Horizontal Tail Installation

1. Slide the horizontal stabilizer tube (450mm x 5mm) into the hole in the rear of the fuselage.
2. Install the two piece horizontal stabilizer as shown.
3. Press the halves into place until the stabilizers snap in position.
4. Connect the elevator pushrod to the ball link on the elevator control horn.

Remove the ball link and press the buttons on the bottom of the stabilizer to disengage for removal.

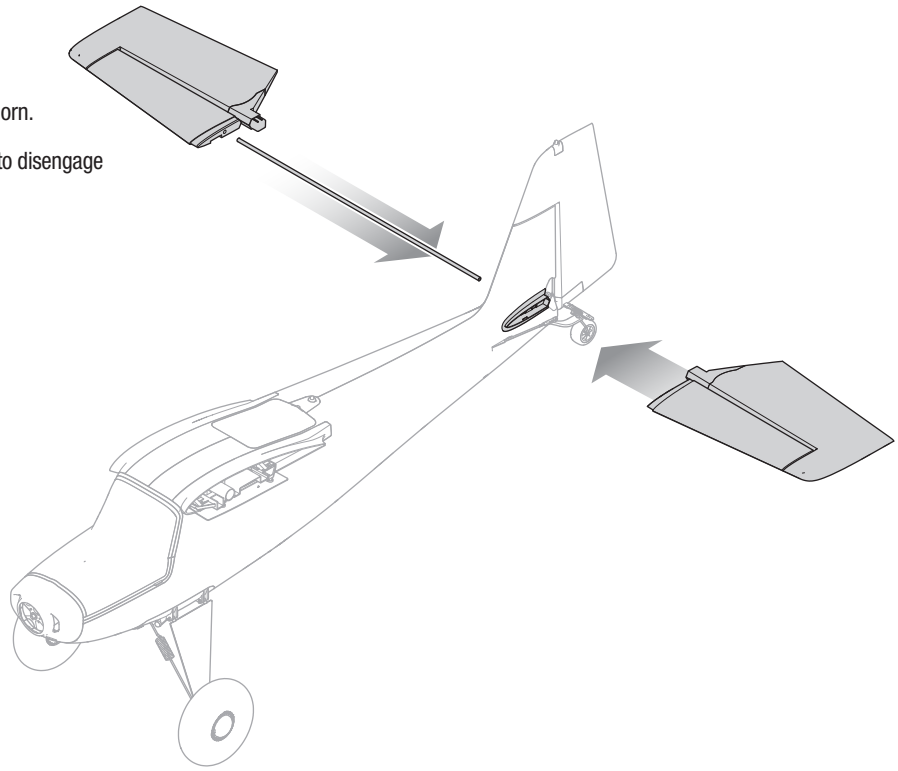

Wing Installation

Mount the Wing to the Fuselage

1. Insert the 560mm x 15mm wing joiner into the fuselage.

   IMPORTANT: The wing joiner is stored during transport inside the fuselage, clipped to the side under the battery hatch.
2. Verify the wing locks are in the unlocked position.
3. Slide the wings onto the wing joiner.
4. Move the lock into the locked position on both wing halves. If the locking pin doesn't drop into place, wiggle the wing half into place while moving the lock.

Slide the lock into the unlocked position to disengage for removing the wings.

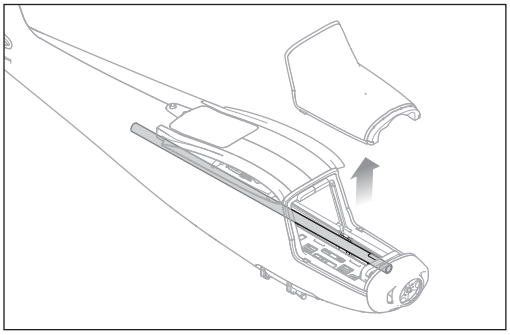

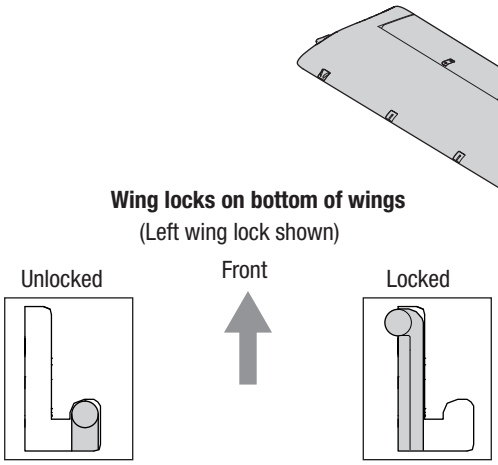

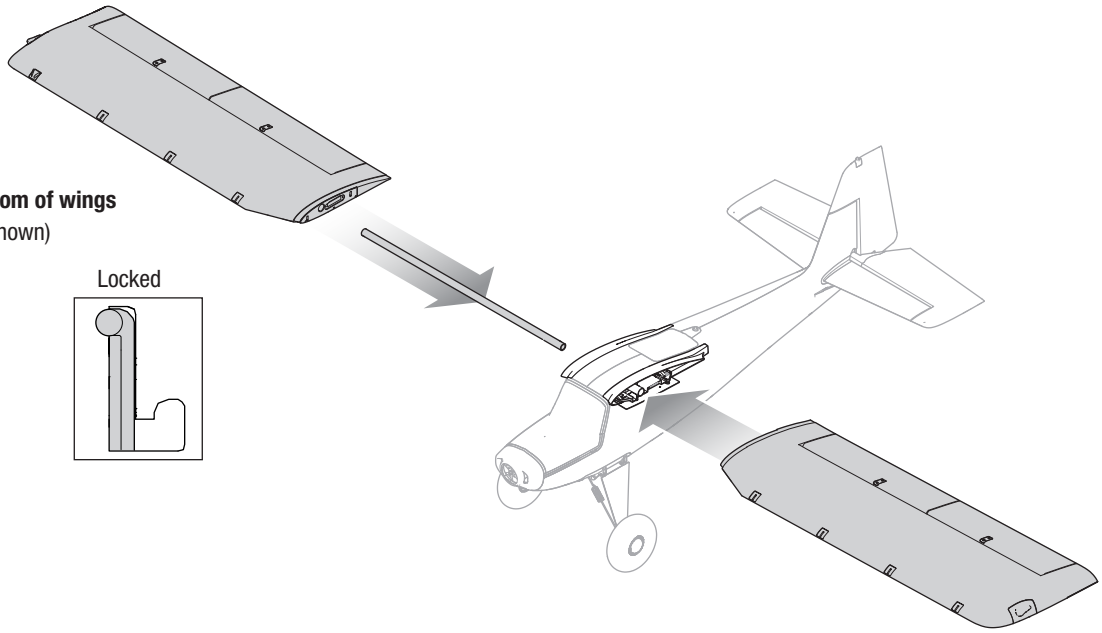

Wing Slat Mount Covers (with Vortex Generators) or Leading Edge Slat Installation (Optional)

Choose between use of the vortex generators or leading edge slats.

1. To remove the vortex clips, carefully lift from the trailing edge of clip.
2. Insert the slat clips at approximately a 45 degree angle from leading edge.
3. Press the part firmly into place until it snaps into place around the mounting rod in the wing.

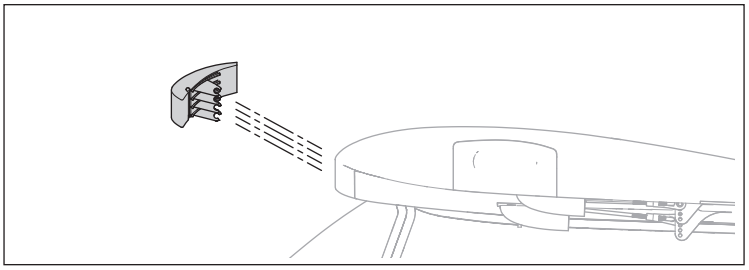

Use the leading edge slats to maximize STOL performance. Expect to adjust elevator trim when using the leading edge slats.

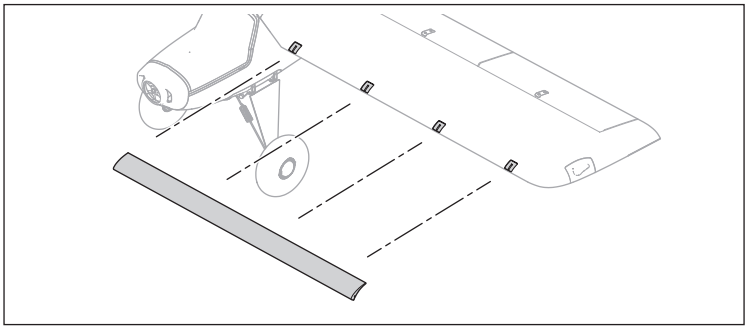

For high speed flight and aerobatics, wing slat mount covers (with vortex generators) are recommended.

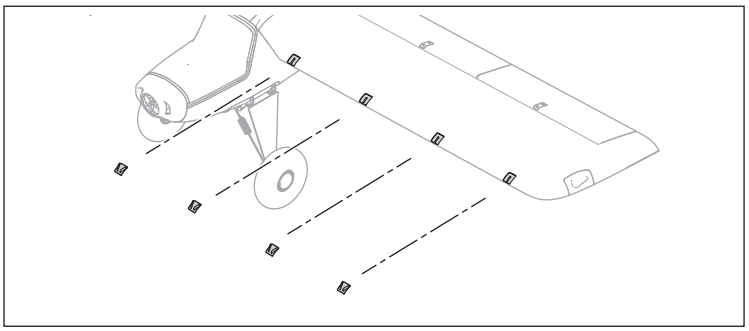

Propeller Installation

WARNING: Never install a cracked, nicked or otherwise damaged propeller or spinner.

NOTICE: If the propeller is not balanced it can cause vibration that could result in damage to the motor and/or mount. It can also cause the stabilization system to not operate correctly and/or decrease the life of the servos.

1. Install the propeller adapter onto the motor with three M3 x 8mm screws, using a 2.5mm hex driver.
2. Install the propeller and nut on the propeller shaft. Get a firm grip on the propeller and motor to hold them secure while tightening the nut. Tighten the nut with a 15mm wrench or socket driver to secure the propeller in place. Ensure the nut is tight enough so the propeller cannot slip.

   IMPORTANT: Do not overtighten the prop nut as damage to the propeller or threads may result.
3. Install the spinner and secure in place with an M3 x 10mm button head machine screw, washer and lock washer using a 2mm hex driver.

   IMPORTANT: Tighten until secure, but avoid over tightening the spinner screw. The spinner cone may become deformed and not spin true if over-tightened.

WARNING: After installation, thoroughly test the propeller with the model facing away from yourself and others. If a propeller is not installed securely it may fly off when the motor spins, and could cause bodily injury.

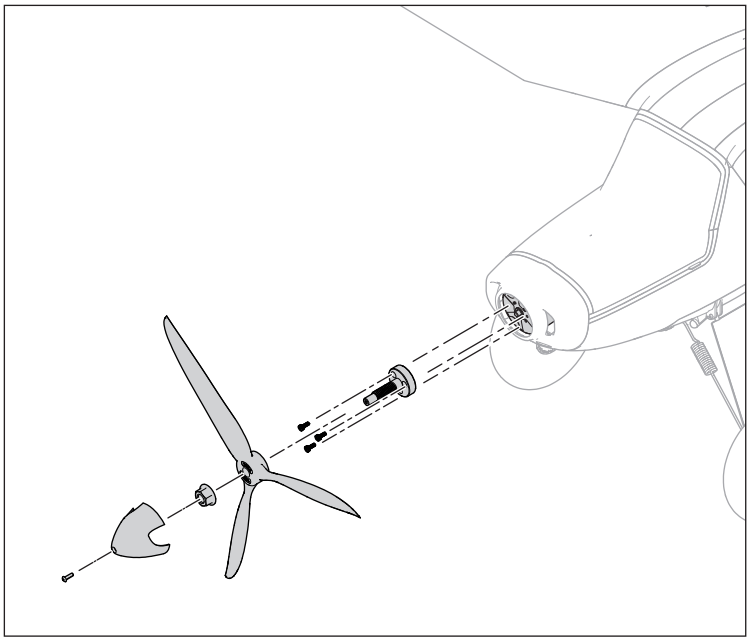

Battery Installation and ESC Arming

The Spektrum 6S 3200mAh Smart G2 LiPo battery (SPMX326S30) is recommended. A 4S to 6S 3200-5000mAh LiPo battery with an IC5 or EC5 connector is required, refer to the Optional Parts List for other recommended batteries. If using a battery other than those listed, the battery should be within the range of capacity, dimensions and weight of the Spektrum LiPo battery packs to fit in the fuselage.

NOTICE: There are four battery mounting positions to allow for different size batteries and flying styles. Always verify the model balances within the recommended CG range before flying. Attempting to fly the model with an aft CG will cause the model to be unstable.

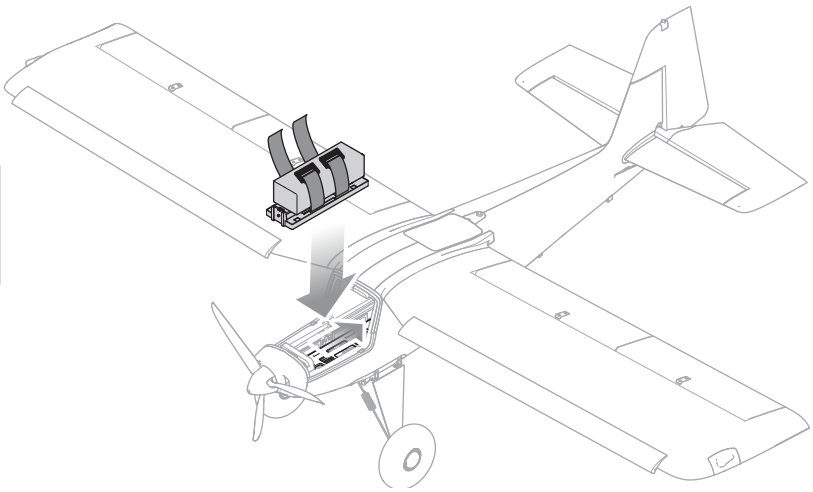

1. Lower the throttle and throttle trim to the lowest settings. Power on the transmitter, then wait 5 seconds.
2. Remove the battery hatch.
3. Pull up on the battery tray locking tab and move the tray forward to release the tray.
4. For added security, apply the loop side (soft side) of the optional hook and loop tape to the bottom of your battery, and the hook side to the battery tray.
5. Secure using the hook and loop straps.
6. Install the fully charged battery and tray in the desired position of the battery compartment. Slide the tray rearward to engage all four tabs on the bottom of the tray.
7. Push down on the battery tray locking tab to secure the battery in position.
8. Connect the battery to the ESC (the ESC is now armed).

CAUTION: Always keep hands away from the propeller. When armed, the motor will turn the propeller in response to any throttle movement.

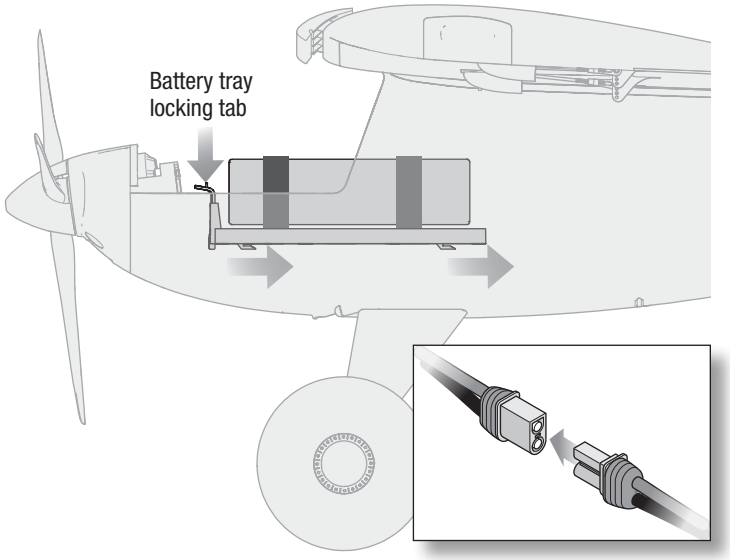

9. Keep the aircraft immobile and away from wind or the system will not initialize.
   - The motor will emit two even tones when the battery is connected and the ESC has a throttle signal.
   - The motor will then emit a series of slow single tones to indicate the number of cells in the LiPo pack connected to the ESC (Four beeps indicates a four-cell LiPo pack. Six beeps indicates a six-cell LiPo pack).
   - Two ascending tones indicate the ESC is armed.
   - The orange LED will illuminate on the receiver when it is initialized.
10. Reinstall the battery hatch.

ESC Error Tone	Tone Meaning	Possible problem
Continuously repeating single tone	Abnormal throttle signal	Transmitter and receiver not bound
		Throttle lead damaged or not plugged into receiver
		Throttle lead plugged into receiver backward
	Throttle signal not at low position	Throttle stick not at low position
		Throttle travel reduced below 100%
		Throttle reversed
		Throttle trim raised

General Binding Tips and Failsafe *BNF*

- The included receiver has been specifically programmed for operation of this aircraft. Refer to the receiver manual for correct setup if the receiver is replaced.
- Keep away from large metal objects while binding.
- Do not point the transmitter's antenna directly at the receiver while binding.
- The orange LED on the receiver will flash rapidly when the receiver enters bind mode.
- Once bound, the receiver will retain its bind settings for that transmitter until you re-bind.
- If the receiver loses transmitter communication, the failsafe will activate. Failsafe moves the throttle channel to low throttle. Pitch and roll channels move to actively stabilize the aircraft in a descending turn.
- If problems occur, refer to the troubleshooting guide or if needed, contact the appropriate Horizon Product Support office.

Transmitter and Receiver Binding / Enabling and Disabling SAFE Select *BNF*

The BNF Basic version of this airplane includes SAFE Select technology, enabling you to choose the level of flight protection. SAFE mode includes angle limits and automatic self leveling. AS3X+ mode provides the pilot with a direct response to the control sticks. SAFE Select is enabled or disabled during the bind process.
With SAFE Select disabled the aircraft is always in AS3X+ mode. With SAFE Select enabled the aircraft will be in SAFE Select mode all the time, or you can assign a switch to toggle between SAFE Select and AS3X+ modes.
Thanks to SAFE Select technology, this aircraft can be configured for full-time SAFE mode, full-time AS3X+ mode, or mode selection can be assigned to a switch.

IMPORTANT: Before binding, read the transmitter setup section in this manual and complete the transmitter setup table to ensure your transmitter is properly programmed for this aircraft.

IMPORTANT: Move the transmitter flight controls (rudder, elevators, and ailerons) and the throttle trim to neutral. Move the throttle to low before and during binding. This process defines the failsafe settings.

You can use either the bind button on the receiver case or the conventional bind plug to complete the binding and SAFE Select process.

SAFE Select can also be activated via Forward Programming in compatible transmitters.

Using The Bind Button...

To Enable SAFE Select

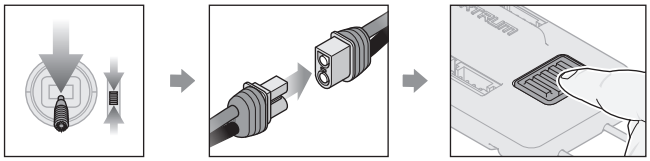

Lower Throttle | Connect Power | Press and hold Bind Button

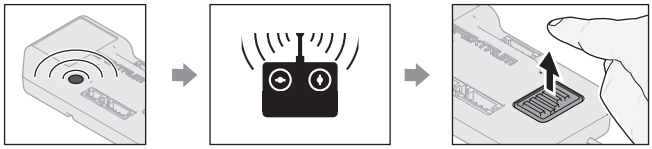

Orange Flashing LED | Bind TX to RX | Release Bind Button

SAFE SELECT ENABLED: The control surfaces cycle back and forth **twice** with a slight pause at neutral position every time the receiver is powered on.

To Disable SAFE Select

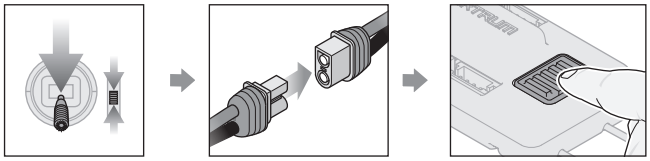

Lower Throttle | Connect Power | Press and hold Bind Button

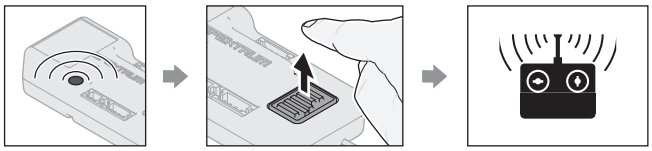

Orange Flashing LED | Release Bind Button | Bind TX to RX

SAFE SELECT DISABLED: The control surfaces cycle back and forth **once** every time the receiver is powered on.

Using The Bind Plug...

To Enable SAFE Select

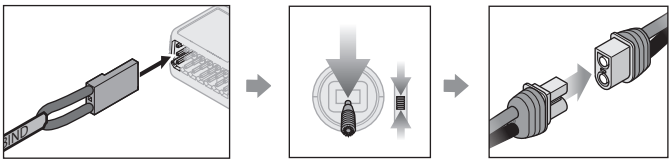

Install Bind Plug | Lower Throttle | Connect Power

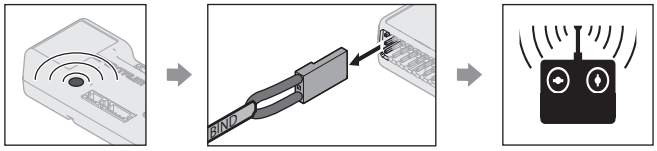

Orange Flashing LED | Remove Bind Plug | Bind TX to RX

SAFE SELECT ENABLED: The control surfaces cycle back and forth **twice** with a slight pause at neutral position every time the receiver is powered on.

To Disable SAFE Select

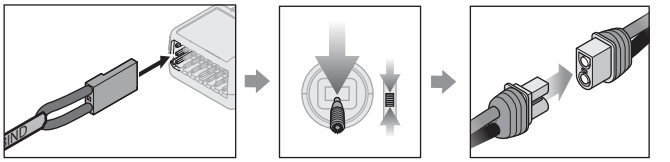

Install Bind Plug | Lower Throttle | Connect Power

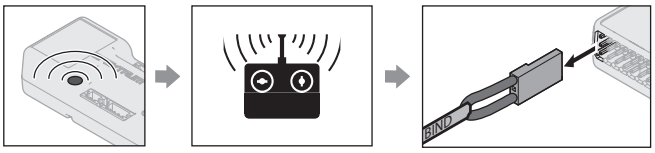

Orange Flashing LED | Bind TX to RX | Remove Bind Plug

SAFE SELECT DISABLED: The control surfaces cycle back and forth **once** every time the receiver is powered on.

Control Surface Centering

After assembly and transmitter setup, confirm that the control surfaces are centered. The model must be powered on, bound to the transmitter in AS3X+ mode, with the throttle left at zero. When enabled, SAFE mode is active at power up. AS3X+ mode is activated when the throttle is raised above 25% for the first time after being powered on. It is normal for the control surfaces to respond to aircraft movement if the aircraft is in AS3X+ or SAFE modes.

1. Verify the trims and subtrims on your transmitter are zero
2. Power the model in AS3X+ mode and leave the throttle at zero
3. Look at the tip of each control surface and verify it is mechanically centered.
4. If adjustment is required, turn the ball link on the linkage to change the length of the linkage between the servo arm and the control horn.

NOTICE: Be aware of the pushrod bottoming out in the ball linkage. Do not thread the pushrod too far into the ball link or the pushrod will damage the ball link and protrude into the area needed for the control ball. Both ends of the pushrod may be threaded in the ball links for larger changes.

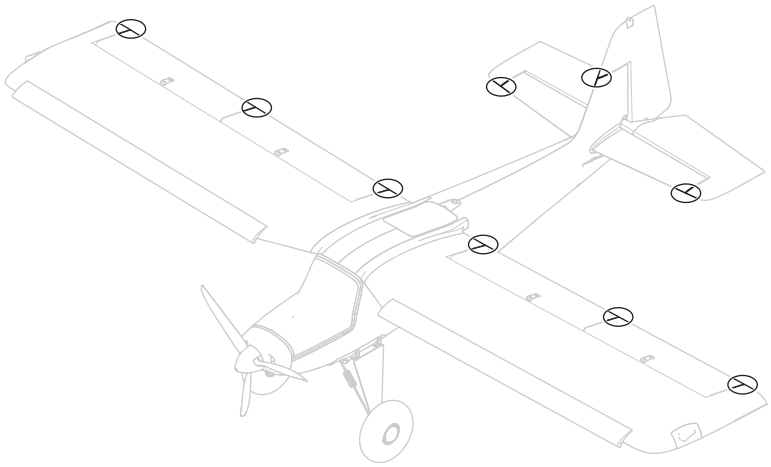

Center of Gravity (CG)

The Center of Gravity (CG) location is measured from the leading edge of the wing. The CG will be affected by battery changes. Always verify the CG is within the recommended range before flight. Check the CG with the model upright.

IMPORTANT: For general flying place the CG at 105mm from the leading edge. For aerobatics place the CG at 110mm from the leading edge.

CAUTION: Install the battery but do not arm the ESC while checking the CG. Personal injury may result.

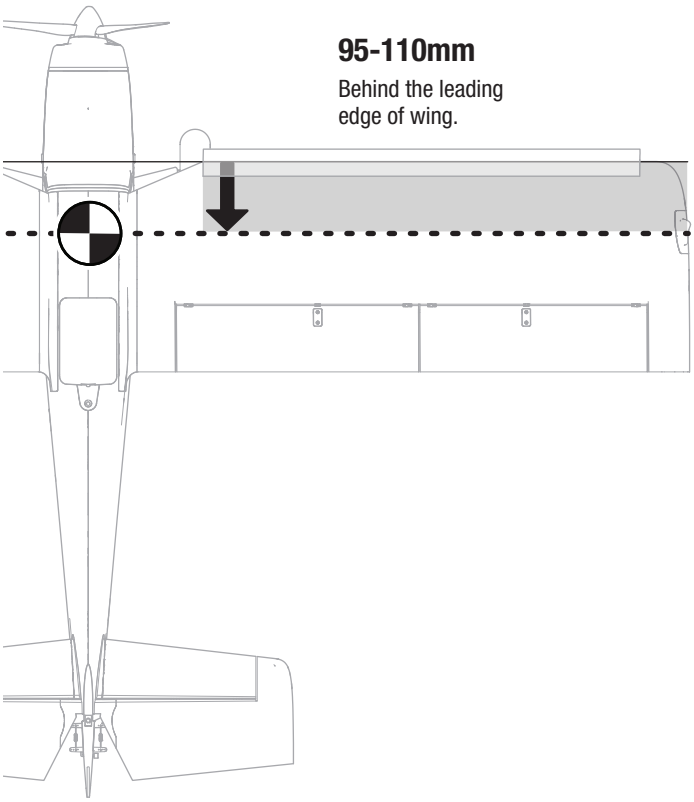

SAFE® Select Switch Designation (*BNF Basic*)

Once SAFE Select is enabled, you can choose to fly in SAFE mode full-time, or assign a switch. Any switch on any channel between 5 and 20 can be used on your transmitter.

TIP: If model has a reversing ESC feature, Aux2 is not available for safe select.

If the aircraft is bound with SAFE Select disabled, the aircraft will be in AS3X+ mode exclusively.

CAUTION: Keep all body parts well clear of the propeller and keep the aircraft securely restrained in case of accidental throttle activation.

IMPORTANT: To be able to assign a switch, first verify:

- The aircraft was bound with SAFE Select enabled.
- Your choice for the SAFE Select switch is assigned to a channel between 5 and 20 (Gear, Aux1-4), and travel is set at 100% in each direction.
- The aileron, elevator, rudder and throttle direction are set to normal, not reverse.
- The aileron, elevator, rudder and throttle are set to 100% travel. If dual rates are in use, the switches need to be in the 100% position.

See your transmitter manual for more information about assigning a switch to a channel.

Assigning a Switch

1. Power on the transmitter.
2. Power on the aircraft.
3. Hold both transmitter sticks to the inside bottom corners, and toggle the desired switch 5 times quickly (1 toggle = full up and down).
4. The control surfaces of the aircraft will move, indicating the switch has been selected.

Repeat the process to assign a different switch or to deactivate the current switch.

SAFE Select Switch Assignment Stick Positions

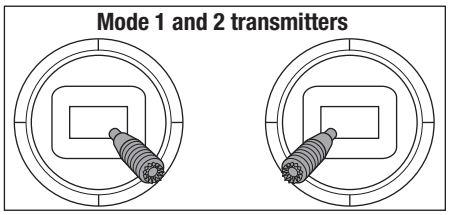

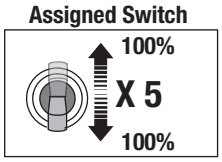

TIP: Use the channel monitor to verify channel movement.

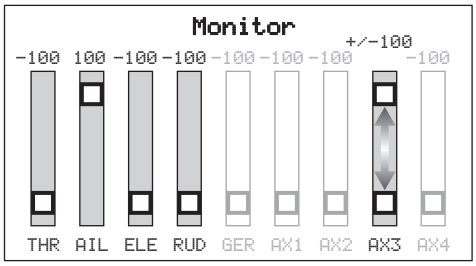

This example of the channel monitor shows the stick positions for assigning a switch, the switch selection on Aux3, and +/- 100% travel on the switch.

Forward Programming

Assign the SAFE Select channel through forward programming on your compatible Spektrum transmitter.

For more information about setting SAFE Select and using Forward Programming, please refer to the following link for a detailed video:

https://www.youtube.com/watch?v=o-46P066cik

Forward Programming SAFE Select Setup	
DX series, NX series, iX series	1. Begin with the transmitter bound to the receiver.
	2. Power ON the transmitter.
	3. Assign a switch for SAFE Select that is not already in use for another function. Use any open channel between 5 and 9 (Gear, Aux1-4).
	4. Set switch H (throttle cut) to prevent accidental motor operation.
	5. Power ON the aircraft. A signal bar appears on your transmitter's main screen when the telemetry information is being received.
	6. Go to the FUNCTION LIST (Model Setup)
	7. Select Forward Programming; Select Gyro Settings, Choose SAFE Select to enter the menu.
	8. Set SAFE Select Ch: To the channel you have chosen for SAFE Select.
	9. Set AS3X and SAFE On or Off as desired for each switch position.

Smart™ Technology Telemetry

Smart Technology Electronic Speed Control (ESC)

This aircraft is equipped with an exclusive Smart technology electronic speed control that can provide a variety of real-time power system related telemetry data while you fly, including motor RPM, current, battery voltage and more to compatible Spektrum AirWare™ equipped transmitters.

When powered on, the ESC will send the below information to the flight control and the information will be displayed on the transmitter telemetry screen.

- RPM*
- Voltage
- Current
- Throttle
- FET Temperature
- BEC Temperature

* During binding the transmitter will perform an auto configuration which will populate the telemetry page. You may need to change the telemetry values on those pages to suit this aircraft and your needs.

To enter the telemetry values:
(For iX series transmitters, you must select Save on each page)

1. Power on your transmitter.
2. Set the throttle cut to on.
3. Power on the aircraft and allow it to initialize.
4. In your transmitter, go to the **Function List** (**Model Setup** in iX series transmitters).
5. Select the **Telemetry** menu option.
6. Go to the **Smart Battery** menu option.
7. Scroll down to **Startup Volts**, enter **4.0V/cell**.
8. Return to the **Telemetry** menu.
9. Go to the **Smart ESC** menu option.
10. Scroll down to **Low Voltage Alarm**, enter **3.4V/cell.**
11. Scroll down to **Poles**, enter **14**.
12. Return to the main screen.

DX/NX screen shots shown below

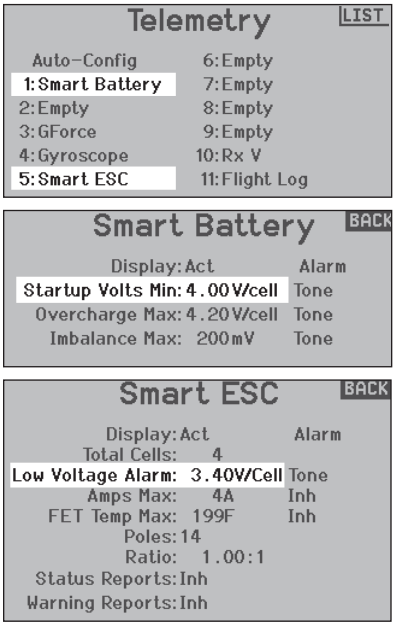

Telemetry Alarms	
Smart Battery : Startup Voltage Minimum	4.0V
Smart ESC : Low Voltage Alarm	3.4V
Smart ESC : Motor Poles	14

Dual Rates and Control Throws

Program your transmitter to set the rates and control throws based on your experience level. These values have been tested and are a good starting point to achieve successful first flight.

After flying, you may choose to adjust the values for the desired control response.

	Low Rate	High Rate
Aileron	33mm	45mm
Elevator (measured at the widest point)	33mm	50mm
Rudder (measured at the widest point)	33mm	40mm
Flap Travel	Partial ▼ = 25mm, Full ▼ = 40mm	

The table to the right shows the factory settings for the control horns and servo arms. These settings, in conjunction with the low rate transmitter settings, are intended for intermediate level pilots to help ensure a successful flight.

Fly the aircraft at these factory settings before making changes.

	Control Horns	Servo Arms
Aileron	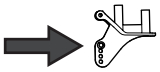	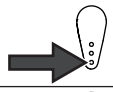
Elevator	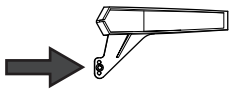	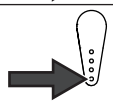
Rudder	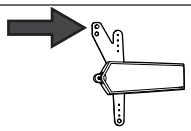	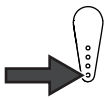
Flaps	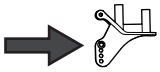	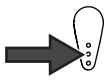

Control Surface Direction

Switch on the transmitter and connect the battery. Use the transmitter to operate the aileron, elevator, rudder and flap controls. View the aircraft from the rear when checking the control directions.

Elevator

1. Pull the elevator stick back. The elevators should move up, which will cause the aircraft to pitch up.
2. Push the elevator stick forward. The elevators should move down, which will cause the aircraft to pitch down.

Ailerons

1. Move the aileron stick to the left. The left aileron should move up and the right aileron down, which will cause the aircraft to bank left.
2. Move the aileron stick to the right. The right aileron should move up and the left aileron down, which will cause the aircraft to bank right.

Rudder

1. Move the rudder stick to the left. The rudder should move to the left, which will cause the aircraft to yaw left.
2. Move the rudder stick to the right. The rudder should move to the right, which will cause the aircraft to yaw right.

Flaps

1. Move your flap control switch down to the partial position.
2. Confirm that the wing flaps move down.
3. Move flap control switch to the full flap position.
4. Confirm the flaps move farther down than in step two.

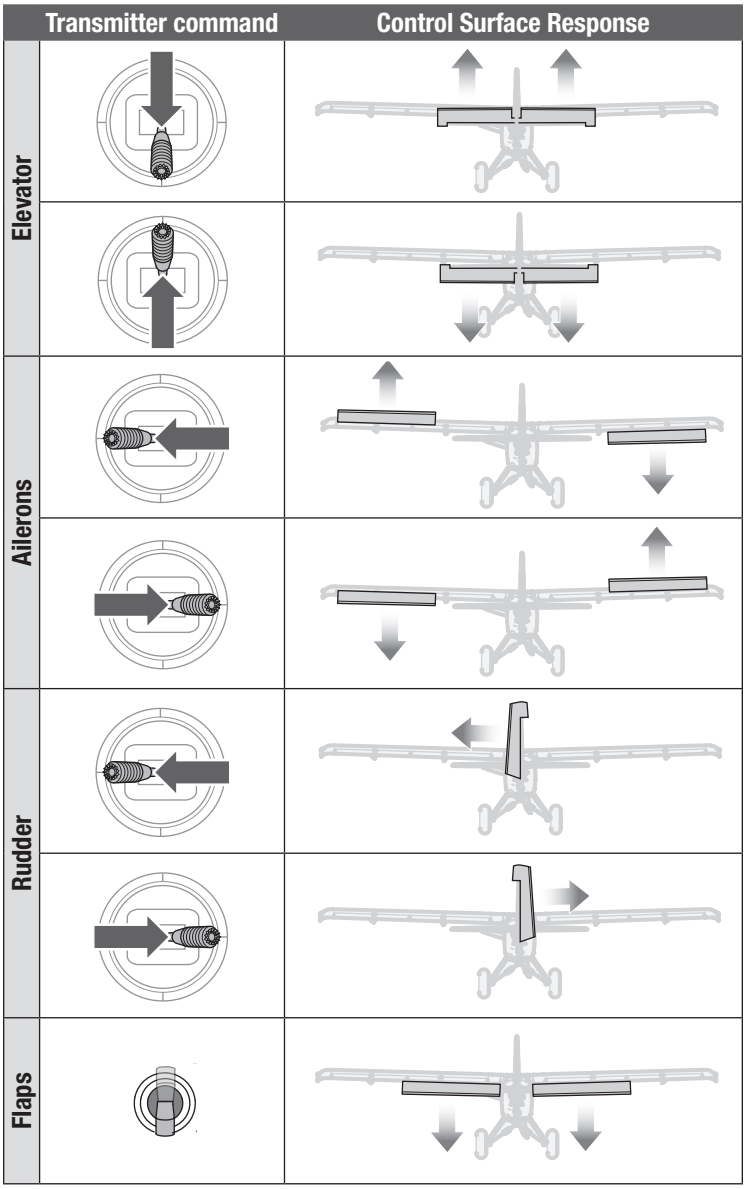

AS3X+ Control Response Test (*BNF Basic*)

WARNING: Do not perform any testing or maintenance with the propeller installed on the aircraft. Serious injury or property damage could result from the motor starting inadvertently.

This test ensures that the AS3X+ control system is functioning properly. Assemble the aircraft and bind your transmitter to the receiver before performing this test.

1. Raise the throttle just above 25%, then lower the throttle to activate AS3X+ technology.

WARNING: Keep all body parts, hair and loose clothing away from spinning motor, as these items could become entangled.

2. Move the entire aircraft as shown and ensure the control surfaces move in the direction indicated in the graphic. If the control surfaces do not respond as shown, do not fly the aircraft. Refer to the receiver manual for more information.

Once the AS3X+ system is active, control surfaces may move rapidly. This is normal. AS3X+ remains active until the battery is disconnected.

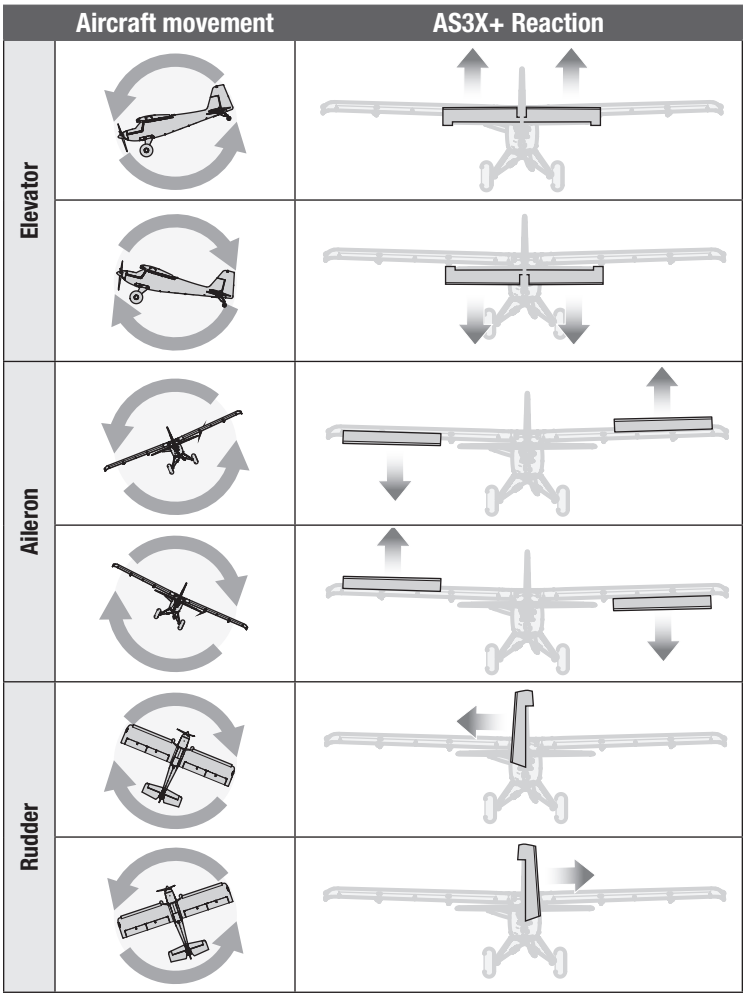

In Flight Trimming

During your first flight, trim the aircraft for level flight at 3/4 throttle. Make small trim adjustments with your transmitter's trim switches to straighten the aircraft's flight path.

After adjusting trim **do not touch the control sticks for 3 seconds.** This allows the receiver to learn the correct settings to optimize AS3X+ performance.

Failure to do so could affect flight performance.

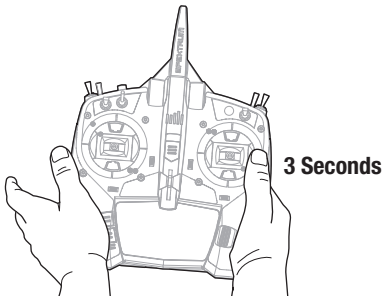

Flying Tips and Repairs

Consult local laws and ordinances before choosing a flying location.

Flying Field

Always choose a wide-open space for flying your aircraft. It is recommended that you fly at a designated RC flying field. Always avoid flying near houses, trees, wires and buildings. Avoid flying in areas where there are many people, such as parks, schoolyards, or soccer fields.

Range Check your Radio System

Before you fly, range check the radio system. Refer to your specific transmitter instruction manual for range test information.

Understanding Oscillation

Once the AS3X system is active (after advancing the throttle for the first time), you will normally see the control surfaces react to aircraft movement. In some flight conditions, you will see oscillation. If oscillation occurs, decrease airspeed. If oscillation persists, refer to the Troubleshooting Guide for more information.

Takeoff

Place the aircraft in position for takeoff (facing into the wind). Set your transmitter in low rate and gradually increase the throttle from ¾ to full and steer with the rudder. As the airplane gains speed, gently pull back on the elevator and climb to a comfortable altitude. You may also set flaps to half travel for shorter takeoffs.

Flying

Fly the airplane and trim it for level flight at ¾ throttle with flaps up. After adjusting trim in flight do not touch the control sticks for 3 seconds. This allows the receiver to learn the correct settings to optimize AS3X performance.

Landing

Make sure to land the aircraft into the wind. Start to slow the model down to an approach speed and set the flaps to half travel. If landing in windy conditions, land at half flap travel. If flying in light winds, set flaps to full for final approach. With flaps and retracts extended, fly the aircraft to approximately 36 inches (90 cm) or less above the runway, using a small amount of throttle for the entire descent. Keep the throttle on until the aircraft is ready to flare. During flare, keep the wings level and the aircraft pointed into the wind. Gently lower the throttle while pulling back on the elevator to bring the aircraft down on its wheels.

Refer to the Dual Rates and expo chart for proper flap to elevator mix to help reduce the pitching tendency from flaps.

NOTICE: When using flaps with this airplane, down elevator to flap mixing is required. Failure to do so may result in loss of control or a crash.

NOTICE: If a crash is imminent, reduce the throttle and trim fully. Failure to do so could result in extra damage to the airframe, as well as damage to the ESC and motor.

NOTICE: After any impact, always ensure the receiver is secure in the fuselage. If you replace the receiver, install the new receiver in the same orientation as the original receiver or damage may result.

NOTICE: Crash damage is not covered under warranty.

NOTICE: When you are finished flying, never leave the airplane in direct sunlight or a hot, enclosed area such as a car. Doing so can damage the foam.

Low Voltage Cutoff (LVC)

When a Li-Po battery is discharged below 3V per cell, it will not hold a charge. The ESC protects the flight battery from over-discharge using Low Voltage Cutoff (LVC). Before the battery charge decreases too much, LVC removes power supplied to the motor. Power to the motor pulses, showing that some battery power is reserved for flight control and safe landing.

Disconnect and remove the Li-Po battery from the aircraft after use to prevent trickle discharge. Charge your Li-Po battery to about half capacity before storage. During storage, make sure the battery charge does not fall below 3V per cell. LVC does not prevent the battery from over-discharge during storage.

NOTICE: Repeated flying to LVC will damage the battery.

TIP: Monitor your aircraft battery's voltage before and after flying by using a Smart LiPo Battery Checker and Servo Driver (SPMXBC100, sold separately).

Repairs

Thanks to the EPO foam material in this aircraft, repairs to the foam can be made using virtually any adhesive (hot glue, regular CA, epoxy, etc). When parts are not repairable, see the Replacement Parts List for ordering by item number. For a listing of all replacement and optional parts, refer to the list at the end of this manual.

NOTICE: Use of CA accelerator on your aircraft can damage paint. DO NOT handle the aircraft until accelerator fully dries.

Post Flight Checklist

Disconnect the flight battery from the ESC
Power OFF the transmitter
Remove the flight battery from the aircraft
Recharge the flight battery

Repair or replace all damaged parts
Store the flight battery apart from the aircraft and monitor the battery charge
Make note of the flight conditions and flight plan results, planning for future flights

Receiver Installation *(PNP)*

The Spektrum AR637T+ receiver is recommended for this airplane. If you choose to install another receiver, ensure that it is at least a 6-channel full range receiver. Refer to your receiver manual for correct installation and operation instructions.

IMPORTANT: A Smart compatible Spektrum receiver is required for thrust reversing, and telemetry information from the ESC.

Installation (AR637T+ shown)

1. Mount the receiver parallel to the length of the fuselage as shown, with the servo ports facing rearward. Use double-sided servo tape.

CAUTION: Incorrect installation of the receiver could cause a crash.

2. Attach the appropriate control surfaces to the their respective ports on the receiver using the chart in the illustration.

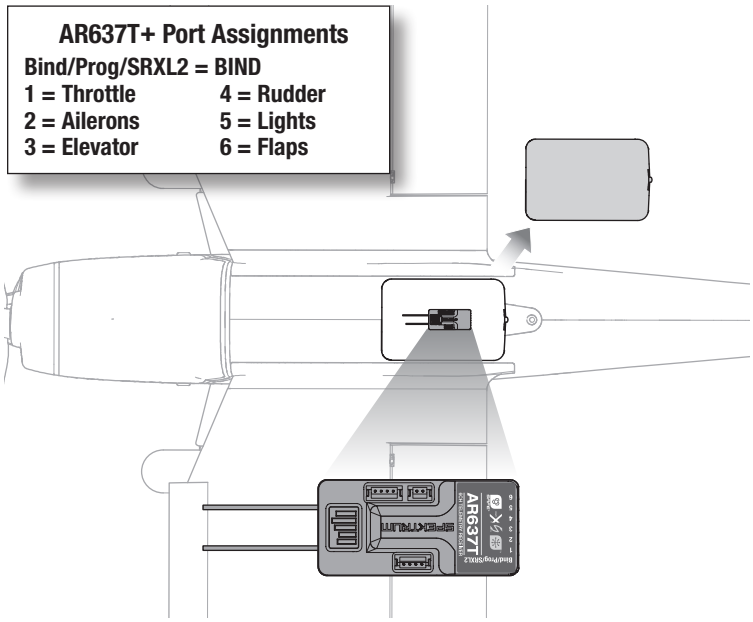

Thrust Reversing *(Optional)*

The Avian™ Smart ESC in this aircraft is equipped with thrust reversing, but it must be enabled before it will function. Reversing the motor can be helpful when taxiing, or for shortening the ground roll after landing. Activating the designated switch reverses motor rotation, throttle will still control motor speed.

CAUTION: Never attempt to use thrust reversing in flight. Applying reverse thrust while in flight will result in loss of control and possibly a crash. Crash damage is not covered under warranty.

IMPORTANT: Thrust reversing requires a Spektrum receiver with Smart Throttle and a Spektrum transmitter with a minimum of 7 channels. The Avian ESC is backwards compatible with conventional receivers (PWM output signal) for normal operation, but reversing functions are only available with Smart Throttle technology.

Thrust Reversing Setup

Transmitter

On the transmitter, select an open channel (not already in use), and assign it to an open switch, or button. Use different channels for thrust reversing and SAFE Select. Motor reversing is assigned to Aux 2/Channel 7, by default, in the Smart ESC. If SAFE Select and the ESC are assigned to the same channel, the motor will reverse in flight.

CAUTION: Do not assign thrust reversing and SAFE Select to the same channel. Doing so will reverse the motor when SAFE Select is enabled during flight, resulting in a crash.

ESC

Set up the transmitter according to the setup chart, and bind your transmitter to the airplane. The airplane must be powered on and bound to the transmitter to access the Smart ESC programming.

As an alternative, it is possible to program the ESC with the Smart ESC Programming Box (SPMXCA200, optional, not included).

IMPORTANT: Do not power the motor on before attempting to enter ESC programming, the programming menu is locked once the motor is powered on. If you need to enter ESC programming after the motor has been powered, you must power cycle by disconnecting the battery and plugging it in again.

ESC Reversing Setup	
DX series, NX series, iX series	1. Begin with the transmitter bound to the receiver.
	2. Power ON the transmitter.
	3. Set switch H (throttle cut) to prevent accidental motor operation.
	4. Set elevator and aileron to high rate.
	5. Set Flight Mode to AS3X (The menu will not open if the Flight Mode is set to SAFE).
	6. Power ON the aircraft. A signal bar appears on the transmitter main screen when the telemetry information is being received.
	7. From the main screen navigate to the last screen past the telemetry screens, the Avian Programming menu (Avian Prog).
	8. All configuration in the Avian Programming menu is done by moving the elevator and aileron stick. Follow the on-screen prompts to access the menu. Move the stick up or down to move the cursor, left or right to select a value or return to the cursor, and up or down to change a value when it is selected.
	9. Set BRAKE TYPE: Reverse
	10. Set BRAKE FORCE: 7
	11. Set THRUST REV: Select the channel you designated for thrust reversing in your transmitter. CH7 is the selection by default, but do not use this default option if you are using Aux2/Ch7 for SAFE Select.
	12. Select EXIT W/ SAVE to save your selections

Tire Service

In the event of severe damage, replacement tires are available (EFL-1333, EFL-1393 tire only). Minor repairs can be made with an inner tube repair kit to the inside of the tire.
To replace or repair the tire:

1. Insert a small flat-head screwdriver into the slot of the hubcap and carefully pop the hubcap from the wheel.
2. Remove the wheel collar from the axle.
3. Use a 1.5mm hex driver to remove the bead locks.
4. Replace the tire, and/or inflation valve as required for your repair.
5. Tighten each beadlock screw in small increments alternating evenly across each of the screws.
6. Inflate tire to your desired diameter. Do not exceed 5.75”(146mm) diameter.
7. Insert rubber plug into air valve.

IMPORTANT: Over inflating can shorten the life of the tire. 3psi maximum pressure.

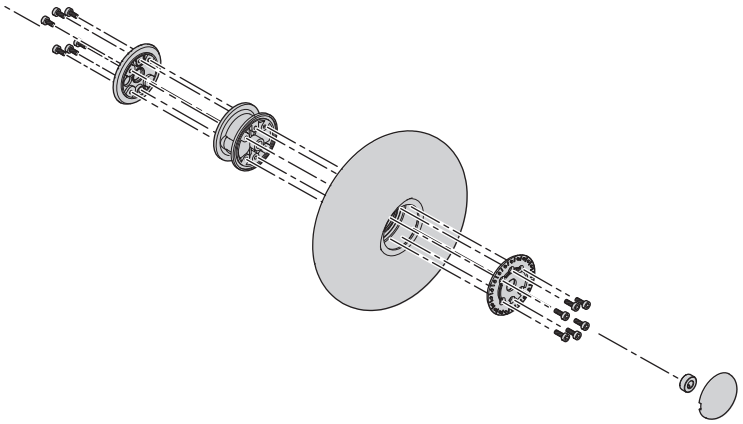

Tire Pressure and Diameter

Set your desired tire diameter with tire pressure. Inflating the tires will increase the tire diameter, reducing pressure will reduce the diameter. We recommend inflating the tires between 5.00” (127mm) and 5.75” (146mm).
Use lower tire pressure for rough surfaces, and higher tire pressure for smooth surfaces. Minimum tire diameter is 5.00” (127mm).

Inflating and Deflating the Tires

Attach the included air hose extension to the air pump. Screw the needle into the end of the air hose. Wet the needle before inserting it into the air valve in the wheel hub for inflation. Do not inflate the tires beyond 5.75” (146mm) diameter (3psi max). The tire pressure is too low to measure with most bicycle or automotive tire pressure gauges. Low pressure gauges for sports balls have the correct range and are available at sporting goods stores.
Insert the needle for pumping into the air valve without the pump to reduce tire pressure. Air will immediately be released from the tire.

Motor Service

CAUTION: Always disconnect the flight battery before performing motor service.

Disassembly

1. Remove the spinner with a 2mm hex driver.
2. Remove the propeller nut with a 15mm wrench. Remove the propeller.
3. Remove the four screws from the front of the cowling and remove the cowl from the fuselage.
4. Remove the four 3 x 16mm screws and the motor with X-mount from the fuselage.
5. Disconnect the motor wires from the ESC wires.
6. Remove the four 3 x 6mm Phillips head machine screws and motor from the X-mount.

Assembly

Assemble in reverse order.

- Correctly align and connect the motor wire colors with the ESC wires.
- Install the propeller with the size numbers facing forward. The propeller may require balancing.

NOTICE: If the propeller is not balanced it can cause vibration that could result in damage to the motor and/or mount. It can also cause the stabilization system to not operate correctly and/or decrease the life of the servos.

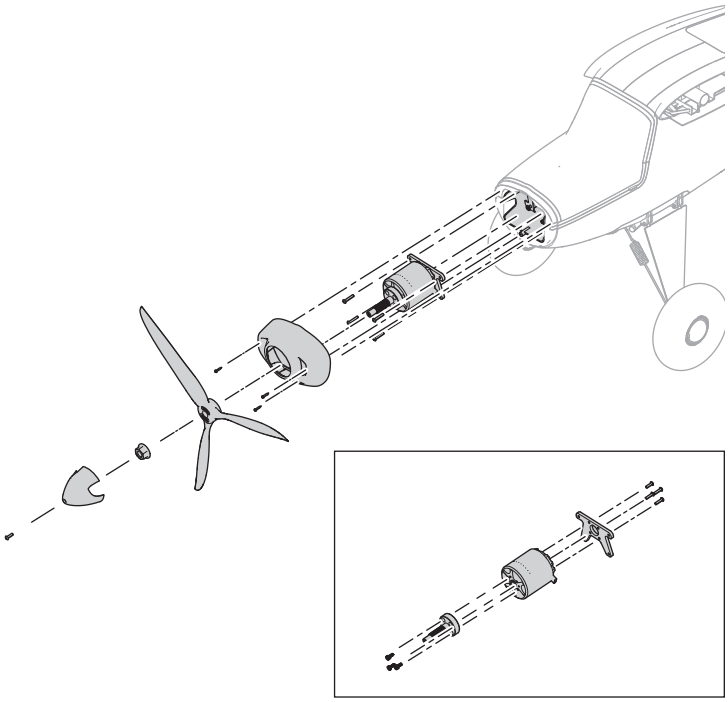

Float Installation *(Optional, floats not included)*

Float Set (EFLA550), float struts included with airplane

1. Remove the main landing gear assembly. The tail wheel assembly may be left on the airplane or removed for operation on floats.
2. Mount the floats on the vertical and diagonal struts included with the Super Timber, with the front spreader bar from the float set, as shown. Use the screws included with the float set to secure the floats to the landing gear assembly. The float with the water rudder should be on the left side of the aircraft.

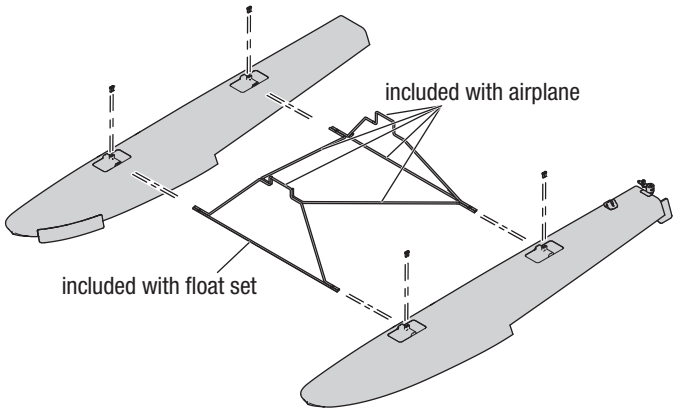

3. Install the water rudder pushrod which connects to the water rudder control horn with the easy connector that is pre-installed on the rudder control horn. Connect it to the clip on the float, install a clip on the left rear vertical strut, and secure it with an M2x8mm screw and M2 nut.

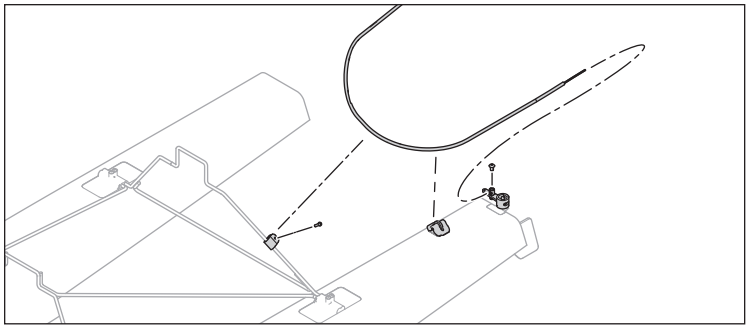

4. Locate the two mounting locations for the float mounting brackets on the bottom of the fuselage.
5. Insert the vertical and diagonal struts into the mounting brackets.
6. Secure the front stuts with two plastic keepers, and four M2.5x10mm self tapping screws with a 1.5mm hex driver.
7. Secure the rear landing strut with the single plastic keeper and one M3x10mm self tapping screw with a 2mm hex driver.
8. Secure the water rudder pushrod into place in the clips along the fuselage.
9. Center the water rudder with the air rudder centered and set the pushrod position with a 2mm hex driver.

Disassemble in reverse order.

Water Rudder Pushrod Connection	
Control Surface	**Control Horn**
Air Rudder	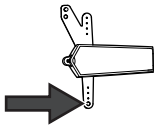
Water Rudder	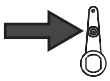

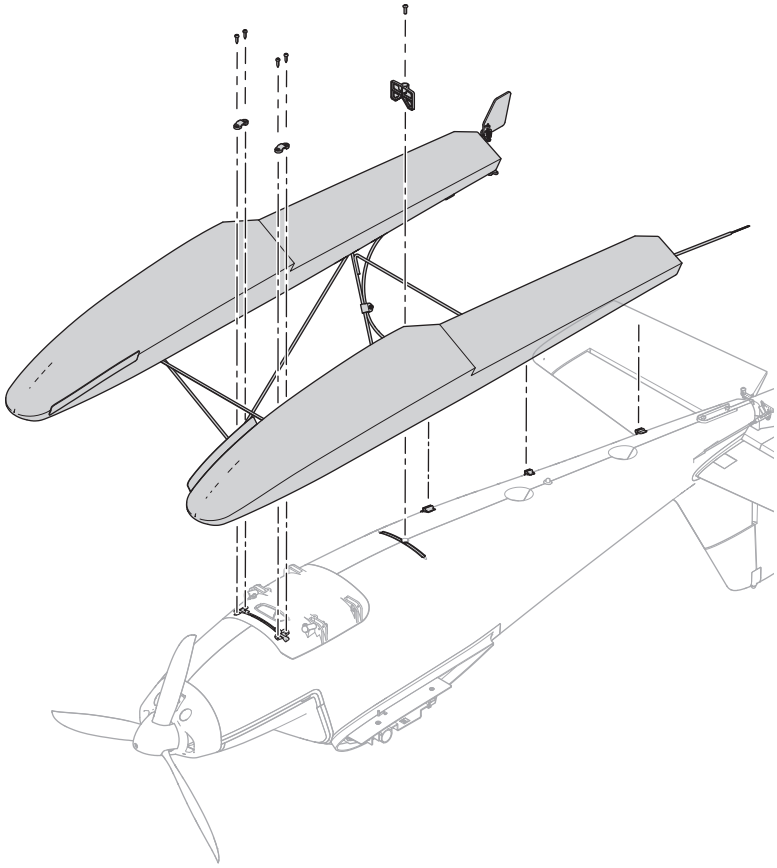

Water deflectors, included with airplane

Install the water deflectors on the inside of both floats as shown, to prevent water from spraying into the propeller. Align the double sided tape on the back of the water deflector with the edge of the float. The water deflectors should be installed 35mm behind the nose of the floats, with the bottom edge of the water deflectors 10mm below the edge of each float.

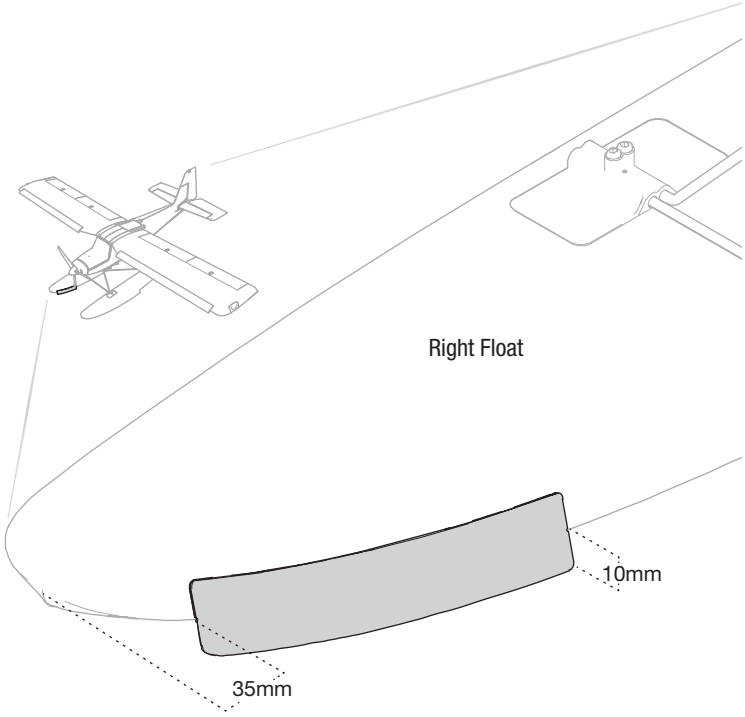

Flying Off Water

Flying off water poses a higher risk because piloting errors or water conditions can cause the aircraft to become stranded. Only fly from the water when a level of comfort has been achieved flying the aircraft from the ground.

Pre-Flight

Ensure the optional floats are secure on the fuselage and the water rudder is correctly connected and operating with the main rudder before putting the aircraft in the water. Select an area to fly that does not have water currents, salt water, or debris. Look around the flight area and be aware of trees, docks, buoys, or other obstacles. Always fly with a spotter and avoid swimmers, boaters, people fishing, and people on the beach.

Taxiing

When taxiing, use low throttle settings and the rudders to steer. Hold up elevator to help keep the rudder in the water and the nose of the floats above the surface. Steer into the wind when turning, and crab into the wind if crosswind taxiing is required. When turning or crabbing into the wind, apply aileron against the wind to keep the upwind side of the wing down and prevent the aircraft from being flipped over. Do not apply down elevator when the airplane is taxiing or during the takeoff run.

On Step

When speed increases with throttle, the floats will rise out of the water and begin to plane on the surface of the water, riding “on step.” The floats will come on step at a speed below flight speed, this is a transitional phase when the aircraft is not up to flight speed yet. This is considered a high speed taxi. Do not attempt to take off as soon as the aircraft comes on step. Use low to medium throttle and hold up elevator to manage speed on the water during a high speed taxi.

Takeoff

To lift off from the water, set the flaps to the takeoff position, hold up elevator and accelerate the aircraft to bring it on step. Relax the up elevator as the airplane comes on step and accelerate to flight speed with full throttle. When the aircraft is travelling at a sufficient speed, pull back slightly on the elevator to rotate for liftoff.

Landing

To land on the water, set the flaps to the landing position, and fly into the wind. Reduce the throttle to a low setting but keep some power during the approach. As the aircraft settles into ground effect, reduce the throttle fully and hold up elevator to flare. Hold up elevator through the touch down and as the airplane decelerates on the water.

WARNING: Never attempt to retrieve a downed aircraft by swimming unless you are sufficiently trained and/or there is another person available to respond in the case of an emergency.

CAUTION: Have a plan for retrieval in the event the airplane becomes stranded. Never retrieve a downed model in the water alone.

CAUTION: If at any time water splashes in the fuselage while flying from water, bring the airplane to shore, open the battery hatch and immediately remove any water that may have gotten in the fuselage. Leave the battery hatch open overnight to let the inside dry out and to prevent moisture damage to the electronic components. Failure to do so could cause the electronic components to fail, which could result in a crash.

TIP: Use a fishing pole with heavy line as a retrieval tool. Attach a tennis ball to the line, and throw the ball past a stranded aircraft to retrieve it.

Troubleshooting Guide AS3X+ (*BNF Basic*)

Problem	Possible Cause	Solution
Oscillation	Damaged propeller or spinner	Replace propeller or spinner
	Imbalanced propeller	Balance the propeller
	Motor vibration	Replace parts or correctly align all parts and tighten fasteners as needed
	Loose receiver	Align and secure receiver in fuselage
	Loose aircraft controls	Tighten or otherwise secure parts (servo, arm, linkage, horn and control surface)
	Worn parts	Replace worn parts (especially propeller, spinner or servo)
	Irregular servo movement	Replace servo
Inconsistent flight performance	Trim is not at neutral	If you adjust trim more than 8 clicks, adjust the clevis to remove trim
	Sub-Trim is not at neutral	No Sub-Trim is allowed. Adjust the servo linkage
	Aircraft was not kept immobile for 5 seconds after battery connection	With the throttle stick in lowest position. Disconnect battery, then reconnect battery and keep the aircraft still for 5 seconds

Troubleshooting Guide

Problem	Possible Cause	Solution
Aircraft will not respond to throttle but responds to other controls	Throttle not at idle and/or throttle trim too high	Reset controls with throttle stick and throttle trim at lowest setting
	Throttle servo travel is lower than 100%	Make sure throttle servo travel is 100% or greater
	Throttle channel is reversed	Reverse throttle channel on transmitter
	Motor disconnected from ESC	Make sure motor is connected to the ESC
Extra propeller noise or extra vibration	Damaged propeller and spinner, collet or motor	Replace damaged parts
	Propeller is out of balance	Balance or replace propeller
	Prop nut is too loose	Tighten the prop nut
Reduced flight time or aircraft underpowered	Flight battery charge is low	Completely recharge flight battery
	Propeller installed backwards	Install propeller with numbers facing forward
	Flight battery damaged	Replace flight battery and follow flight battery instructions
	Flight conditions may be too cold	Make sure battery is warm before use
	Battery capacity too low for flight conditions	Replace battery or use a larger capacity battery
Aircraft will not Bind (during binding) to transmitter	Transmitter too near aircraft during binding process	Move powered transmitter a few feet from aircraft, disconnect and reconnect flight battery to aircraft
	Aircraft or transmitter is too close to large metal object, wireless source or another transmitter	Move aircraft and transmitter to another location and attempt binding again
	The bind plug is not installed correctly in the bind port	Install bind plug in bind port and bind the aircraft to the transmitter
	Flight battery/transmitter battery charge is too low	Replace/recharge batteries
	Bind switch or button not held long enough during the bind process	Power off transmitter and repeat bind process. Hold transmitter bind button or switch until receiver is bound
Aircraft will not connect (after binding) to transmitter	Transmitter too near aircraft during connecting process	Move powered transmitter a few feet from aircraft, disconnect and reconnect flight battery to aircraft
	Aircraft or transmitter is too close to large metal object, wireless source or another transmitter	Move aircraft and transmitter to another location and attempt connecting again
	Bind plug left installed in bind port	Rebind transmitter to the aircraft and remove the bind plug before cycling power
	Aircraft bound to different model memory (ModelMatch™ radios only)	Select correct model memory on transmitter
	Flight battery/Transmitter battery charge is too low	Replace/recharge batteries
	Transmitter may have been bound to a different aircraft using different DSM protocol	Bind aircraft to transmitter
Control surface does not move	Control surface, control horn, linkage or servo damage	Replace or repair damaged parts and adjust controls
	Wire damaged or connections loose	Do a check of wires and connections, connect or replace as needed
	Transmitter is not bound correctly or the incorrect airplanes was selected	Re-bind or select correct airplane in transmitter
	Flight battery charge is low	Fully recharge flight battery
	BEC (Battery Elimination Circuit) of the ESC is damaged	Replace ESC
Controls reversed	Transmitter settings are reversed	Perform the Control Direction Test and adjust the controls on transmitter appropriately
Motor power pulses then motor loses power	ESC uses default soft Low Voltage Cutoff (LVC)	Recharge flight battery or replace battery that is no longer performing
	Weather conditions might be too cold	Postpone flight until weather is warmer
	Battery is old, worn out, or damaged	Replace battery
	Battery C rating might be too low	Use recommended battery

Replacement Parts

Part #	Description
EFL-1321	Propeller 13 x 8, 3-Blade; Super Timber 1.7m
EFL-1322	Fuselage w/Rudder & LEDs; Super Timber 1.7m
EFL-1323	Right Wing w/LEDs; Super Timber 1.7m
EFL-1324	Left Wing w/LEDs; Super Timber 1.7m
EFL-1325	Horizontal Stabilizer; Super Timber 1.7m
EFL-1327	Motor Prop Shaft w/Prop Nut; Super Timber 1.7m
EFL-1328	Motor Mount; Super Timber 1.7m
EFL-1329	Spinner; Super Timber 1.7m
EFL-1330	Battery Hatch; Super Timber 1.7m
EFL-1331	Landing Gear Assembly; Super Timber 1.7m
EFL-1332	Hardware Set; Super Timber 1.7m
EFL-1333	Replacement Inflatable Tundra Tire Set, 5.5” (140mm)
EFL-1334	Cowling w/LED; Super Timber 1.7m
EFL-1335	Landing Gear Springs; Super Timber 1.7m
EFL-1336	Receiver Hatch; Super Timber 1.7m
EFL-1337	Tail Wheel Assembly; Super Timber 1.7m
EFL-1338	Pushrod Set w/Ball Links; Super Timber 1.7m
EFL-1339	Wing and Horizontal Tail Carbon Tubes; Super Timber 1.7m
EFL-1340	Hands-Free Connector Assembly; Super Timber 1.7m
EFL-1341	Servo Covers; Super Timber 1.7m
EFL-1342	Battery Tray w/Straps; Super Timber 1.7m
EFL-1343	Wing Slats; Super Timber 1.7m
EFL-1344	Wing Slat Cover Clips; Super Timber 1.7m
EFL-1345	Wing Lock Assembly w/Cover; Super Timber 1.7m
EFL-1346	Float Landing Gear Struts; Super Timber 1.7m
EFL-1347	Float Linkage Clips; Super Timber 1.7m
EFL-1348	Water Rudder Linkage; Super Timber 1.7m
EFL-1349	Air Pump and Air Needle, Inflatable Tundra Tires
SPM-1003	Brushless Outrunner Motor: 5055-500Kv 14-pole
SPMXAE85A	Avian 85-Amp Smart Lite Brushless ESC; 3S-6S IC5
SPMSA347	A347 9g Sub-Micro Metal Gear Digital Servo
EFL-1350	Inflatable Tundra Tire and Beadlock Wheel Set w/Pump, 5.5” (140mm)
EFL-1326	Decal Sheet; Super Timber 1.7m
SPM-1032	AR637T+ 6 Channel SAFE and AS3X+ Telemetry Receiver
EFL-1385	Tundra Beadlock Hubcaps, Locking Screws, Axle Adapters, Rubber Valve Plug
EFL-1393	Tundra Inflatable Replacement Rubber Tire; 5.5” (140mm)

Recommended Items

Part #	Description
SPMX326S30	3200mAh 6S 22.2V Smart G2 LiPo 30C; IC5
SPMR8200	NX8 8 Channel Transmitter Only
SPMXC2040	Smart S1400 G2 AC Charger, 1x400W

Optional Items

Part #	Description
SPMR7120	NX7e+ 14-Channel DSMX Transmitter Only, Black Edition
SPMX46S50	4000mAh 6S 22.2V Smart G2 LiPo 50C; IC5
SPMX56S50	5000mAh 6S 22.2V Smart G2 LiPo 50C; IC5
SPMX50004S30	5000mAh 4S 14.8V Smart LiPo 30C; IC5
SPMXBC200	XBC200 SMART Battery Checker & Servo Driver
SPM6730	Smart Charger Case
SPMXCA300	Smart Lipo Bag, 16 x7.5 x 6.5 cm
SPMXC2020	Smart S1200 G2 AC Charger; 1x200W

Important Federal Aviation Administration (FAA) Information

Use the QR code below to learn more about the Recreational UAS Safety Test (TRUST), as was introduced by the 2018 FAA Reauthorization Bill. This free test is required by the FAA for all recreational flyers in the United States. The completed certificate must be presented upon request by any FAA or law enforcement official.

If your model aircraft weighs more than .55lbs or 250 grams, you are required by the FAA to register as a recreational flyer and apply your registration number to the outside of your aircraft. To learn more about registering with the FAA, use the QR code below.

According to FAA regulation, all unmanned aircraft over .55lbs (250 grams) flying in United States airspace are required to either fly within an FAA-Recognized Identification Area (FRIA) or continually transmit an FAA-registered remote identification from a Remote ID broadcast module, such as the Spektrum™ Sky™ Remote ID module (SPMA9500). Use the QR code to learn more about the FAA Remote ID regulations.

AMA National Model Aircraft Safety Code

Effective January 1, 2018

A model aircraft is a non-human-carrying device capable of sustained flight within visual line of sight of the pilot or spotter(s). It may not exceed limitations of this code and is intended exclusively for sport, recreation, education and/or competition. All model flights must be conducted in accordance with this safety code and related AMA guidelines, any additional rules specific to the flying site, as well as all applicable laws and regulations.

As an AMA member I agree:

- I will not fly a model aircraft in a careless or reckless manner.
- I will not interfere with and will yield the right of way to all human-carrying aircraftusing AMA's See and Avoid Guidance and a spotter when appropriate.
- I will not operate any model aircraft while I am under the influence of alcohol or any drug that could adversely affect my ability to safely control the model.
- I will avoid flying directly over unprotected people, moving vehicles, and occupied structures.
- I will fly Free Flight (FF) and Control Line (CL) models in compliance with AMA's safety programming.
- I will maintain visual contact of an RC model aircraft without enhancement other than corrective lenses prescribed to me. When using an advanced flight system, such as an autopilot, or flying First-Person View (FPV), I will comply with AMA's Advanced Flight System programming.
- I will only fly models weighing more than 55 pounds, including fuel, if certified through AMA's Large Model Airplane Program.
- I will only fly a turbine-powered model aircraft in compliance with AMA's Gas Turbine Program.
- I will not fly a powered model outdoors closer than 25 feet to any individual, except for myself or my helper(s) located at the flightline, unless I am taking off and landing, or as otherwise provided in AMA's Competition Regulation.
- I will use an established safety line to separate all model aircraft operations from spectators and bystanders.

Limited Warranty

What this Warranty Covers

Horizon Hobby, LLC, (Horizon) warrants to the original purchaser that the product purchased (the "Product") will be free from defects in materials and workmanship at the date of purchase.

What is Not Covered

This warranty is not transferable and does not cover (i) cosmetic damage, (ii) damage due to acts of God, accident, misuse, abuse, negligence, commercial use, or due to improper use, installation, operation or maintenance, (iii) modification of or to any part of the Product, (iv) attempted service by anyone other than a Horizon Hobby authorized service center, (v) Product not purchased from an authorized Horizon dealer, or (vi) Product not compliant with applicable technical regulations, or (vii) use that violates any applicable laws, rules, or regulations.

OTHER THAN THE EXPRESS WARRANTY ABOVE, HORIZON MAKES NO OTHER WARRANTY OR REPRESENTATION, AND HEREBY DISCLAIMS ANY AND ALL IMPLIED WARRANTIES, INCLUDING, WITHOUT LIMITATION, THE IMPLIED WARRANTIES OF NON-INFRINGEMENT, MERCHANTABILITY AND FITNESS FOR A PARTICULAR PURPOSE. THE PURCHASER ACKNOWLEDGES THAT THEY ALONE HAVE DETERMINED THAT THE PRODUCT WILL SUITABLY MEET THE REQUIREMENTS OF THE PURCHASER'S INTENDED USE.

Purchaser's Remedy

Horizon's sole obligation and purchaser's sole and exclusive remedy shall be that Horizon will, at its option, either (i) service, or (ii) replace, any Product determined by Horizon to be defective. Horizon reserves the right to inspect any and all Product(s) involved in a warranty claim. Service or replacement decisions are at the sole discretion of Horizon. Proof of purchase is required for all warranty claims. SERVICE OR REPLACEMENT AS PROVIDED UNDER THIS WARRANTY IS THE PURCHASER'S SOLE AND EXCLUSIVE REMEDY.

Limitation of Liability

HORIZON SHALL NOT BE LIABLE FOR SPECIAL, INDIRECT, INCIDENTAL OR CONSEQUENTIAL DAMAGES, LOSS OF PROFITS OR PRODUCTION OR COMMERCIAL LOSS IN ANY WAY, REGARDLESS OF WHETHER SUCH CLAIM IS BASED IN CONTRACT, WARRANTY, TORT, NEGLIGENCE, STRICT LIABILITY OR ANY OTHER THEORY OF LIABILITY, EVEN IF HORIZON HAS BEEN ADVISED OF THE POSSIBILITY OF SUCH DAMAGES. Further, in no event shall the liability of Horizon exceed the individual price of the Product on which liability is asserted. As Horizon has no control over use, setup, final assembly, modification or misuse, no liability shall be assumed nor accepted for any resulting damage or injury. By the act of use, setup or assembly, the user accepts all resulting liability. If you as the purchaser or user are not prepared to accept the liability associated with the use of the Product, purchaser is advised to return the Product immediately in new and unused condition to the place of purchase.

Law

These terms are governed by Illinois law (without regard to conflict of law principals). This warranty gives you specific legal rights, and you may also have other rights which vary from state to state. Horizon reserves the right to change or modify this warranty at any time without notice.

WARRANTY SERVICES

Questions, Assistance, and Services

Your local hobby store and/or place of purchase cannot provide warranty support or service. Once assembly, setup or use of the Product has been started, you must contact your local distributor or Horizon directly. This will enable Horizon to better answer your questions and service you in the event that you may need any assistance. For questions or assistance, please visit our website at www.horizonhobby.com, submit a Product Support Inquiry, or call the toll free telephone number referenced in the Warranty and Service Contact Information section to speak with a Product Support representative.

Inspection or Services

If this Product needs to be inspected or serviced and is compliant in the country you live and use the Product in, please use the Horizon Online Service Request submission process found on our website or call Horizon to obtain a Return Merchandise Authorization (RMA) number. Pack the Product securely using a shipping carton. Please note that original boxes may be included, but are not designed to withstand the rigors of shipping without additional protection. Ship via a carrier that provides tracking and insurance for lost or damaged parcels, as Horizon is not responsible for merchandise until it arrives and is accepted at our facility. An Online Service Request is available at http://www.horizonhobby.com/content/service-center_render-service-center. If you do not have internet access, please contact Horizon Product Support to obtain a RMA number along with instructions for submitting your product for service. When calling Horizon, you will be asked to provide your complete name, street address, email address and phone number where you can be reached during business hours. When sending product into Horizon, please include your RMA number, a list of the included items, and a brief summary of the problem. A copy of your original sales receipt must be included for warranty consideration. Be sure your name, address, and RMA number are clearly written on the outside of the shipping carton.

NOTICE: Do not ship LiPo batteries to Horizon. If you have any issue with a LiPo battery, please contact the appropriate Horizon Product Support office.

Warranty Requirements

For Warranty consideration, you must include your original sales receipt verifying the proof-of-purchase date. Provided warranty conditions have been met, your Product will be serviced or replaced free of charge. Service or replacement decisions are at the sole discretion of Horizon.

Non-Warranty Service

Should your service not be covered by warranty, service will be completed and payment will be required without notification or estimate of the expense unless the expense exceeds 50% of the retail purchase cost. By submitting the item for service you are agreeing to payment of the service without notification. Service estimates are available upon request. You must include this request with your item submitted for service. Non-warranty service estimates will be billed a minimum of ½ hour of labor. In addition you will be billed for return freight. Horizon accepts money orders and cashier's checks, as well as Visa, MasterCard, American Express, and Discover cards. By submitting any item to Horizon for service, you are agreeing to Horizon's Terms and Conditions found on our website http://www.horizonhobby.com/content/service-center_render-service-center.

ATTENTION: Horizon service is limited to Product compliant in the country of use and ownership. If received, a non-compliant Product will not be serviced. Further, the sender will be responsible for arranging return shipment of the un-serviced Product, through a carrier of the sender's choice and at the sender's expense. Horizon will hold non-compliant Product for a period of 60 days from notification, after which it will be discarded.

10/15

Contact Information

Country of Purchase	Horizon Hobby	Contact Information	Address
United States of America	Horizon Service Center (Repairs and Repair Requests)	servicecenter.horizonhobby.com/RequestForm/	2904 Research Rd Champaign, Illinois, 61822 USA
	Horizon Product Support (Product Technical Assistance)	productsupport@horizonhobby.com 877-504-0233	
	Sales	websales@horizonhobby.com 800-338-4639	
European Union	Horizon Technischer Service	service@horizonhobby.de	Hanskampring 9 D 22885 Barsbüttel, Germany
	Sales: Horizon Hobby GmbH	+49 (0) 4121 2655 100	

FCC Information

Contains FCC ID: BRWTIARLGTNG1

Supplier's Declaration of Conformity

Super Timber 1.7m (EFL02550/EFL02575)

This device complies with part 15 of the FCC Rules. Operation is subject to the following two conditions: (1) This device may not cause harmful interference, and (2) this device must accept any interference received, including interference that may cause undesired operation.

CAUTION: Changes or modifications not expressly approved by the party responsible for compliance could void the user's authority to operate the equipment.

NOTE: This equipment has been tested and found to comply with the limits for a Class B digital device, pursuant to part 15 of the FCC Rules. These limits are designed to provide reasonable protection against harmful interference in a residential installation. This equipment generates, uses and can radiate radio frequency energy and, if not installed and used in accordance with the instructions, may cause harmful interference to radio communications. However, there is no guarantee that interference will not occur in a particular installation. If this equipment does cause harmful interference to radio or television reception, which can be determined by turning the equipment off and on, the user is encouraged to try to correct the interference by one or more of the following measures:

- Reorient or relocate the receiving antenna.
- Increase the separation between the equipment and receiver.
- Connect the equipment into an outlet on a circuit different from that to which the receiver is connected.
- Consult the dealer or an experienced radio/TV technician for help.

Horizon Hobby, LLC
2904 Research Rd.,
Champaign, IL 61822
Email: compliance@horizonhobby.com
Web: HorizonHobby.com

IC Information

Contains IC: 6157A-TIARLGTNG1
CAN ICES-3 (B)/NMB-3(B)

This device contains license-exempt transmitter(s)/receivers(s) that comply with Innovation, Science, and Economic Development Canada's license-exempt RSS(s). Operation is subject to the following 2 conditions:

1. This device may not cause interference.
2. This device must accept any interference, including interference that may cause undesired operation of the device.

Compliance Information for the European Union

EU Compliance Statement:

Super Timber 1.7m BNF (EFL02550); Hereby, Horizon Hobby, LLC declares that the device is in compliance with the following: EU Radio Equipment Directive 2014/53/EU; RoHS 2 Directive 2011/65/EU; RoHS 3 Directive - Amending 2011/65/EU Annex II 2015/863.

Super Timber 1.7m PNP (EFL02575); Hereby, Horizon Hobby, LLC declares that the device is in compliance with the following: EU EMC Directive 2014/30/EU; RoHS 2 Directive 2011/65/EU; RoHS 3 Directive - Amending 2011/65/EU Annex II 2015/863.

The full text of the EU declaration of conformity is available at the following internet address: https://www.horizonhobby.com/content/support-render-compliance.

Wireless Frequency Range and Wireless Output Power:

Receiver:

2402-2478 MHz/ 19.95dBm

EU Manufacturer of Record:
Horizon Hobby, LLC
2904 Research Road
Champaign, IL 61822 USA

EU Importer of Record:
Horizon Hobby, GmbH
Hanskampring 9
22885 Barsbüttel Germany

WEEE NOTICE:

This appliance is labeled in accordance with European Directive 2012/19/EU concerning waste of electrical and electronic equipment (WEEE). This label indicates that this product should not be disposed of with household waste. It should be deposited at an appropriate facility to enable recovery and recycling.

E328

UK CA

© 2026 Horizon Hobby, LLC.
E-flite, Avian, DSM, DSM2, DSMX, Bind-N-Fly, BNF, the BNF logo, Plug-N-Play, AS3X+, SAFE, the SAFE logo, ModelMatch, EC5, IC5, and the Horizon Hobby logo are trademarks or registered trademarks of Horizon Hobby, LLC.
The Spektrum trademark is used with permission of Bachmann Industries, Inc.
All other trademarks, service marks and logos are property of their respective owners.
US 8,672,726. US 9,056,667. US 9,753,457. US 9,930,567. US 10,078,329. US 10,419,970. US 10,849,013. Other patents pending.
https://www.horizonhobby.com/content/e-flite-rc